БЕЛИМПОРТСНАБ

Integrated Proportional Amplifier

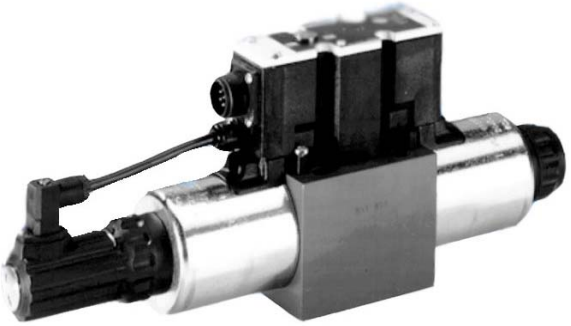

RT-4WREE.-2X

Series: 3X

For valves type 4WRAE. -2X

Block circuit diagram

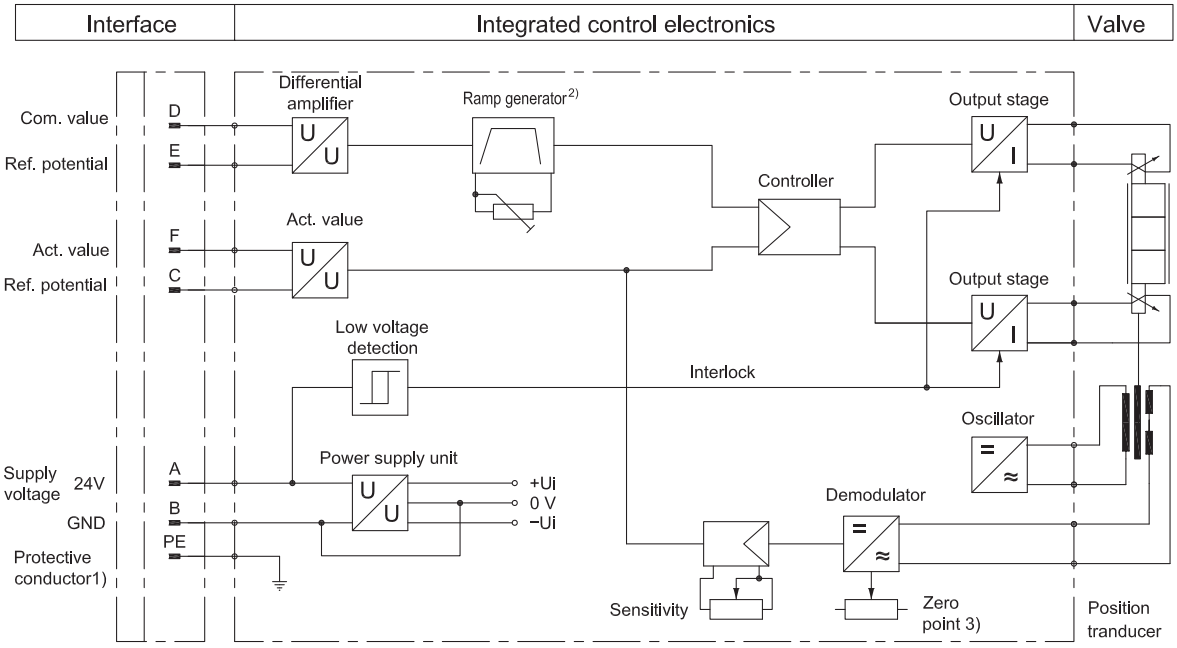

1) PE is connected to the cooling body and the valve housing
2) Ramp can be externally adjusted from 0 to 5 s;
3) Zero point is externally adjustable

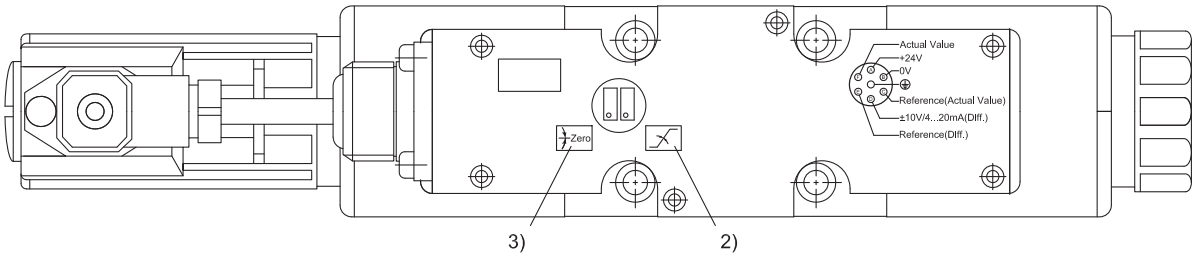

Ordering code

RT-4WREE _ -2X / _ - 30 - CN

***Rebo*Tech**

for valves (type 4WREE6) = 6

for valves (type 4WREE10) = 10

20 to 29: (unchanged installation and connection dimensions) = 2X

A1 = command value input ± 10 V

F1 = Command value input 4 to 20 mA

30 = Design number

CN = Made in China

Further details in clear text

Technical data (For applications beyond these parameters, please consult us!)

Operating voltage		U_B	24 VDC + 40 % - 20 %
—Upper limit value		$U_B(t)_{max}$	35 V
—Lower limit value		$U_B(t)_{min}$	19 V
Power consumption		P_s	<45 VA
Current consumption		I	< 2 A
Command value	A1	U_e	± 10 V，R_e > 50kΩ
	F1	I_e	4 to 20mA，R_e < 200Ω
Maximum output current		I_{max}	2.5 A ； $R_{(20)}$ = 2 Ω
Ramp time		t	0 ~ 5s
Type of connection			Socket;DIN 43650-AM2 Plug;E DIN 43563-BF6-3/PG11(should be ordered separately)
Permissible operating temperature range			- 20 ~ 80 ℃
Storage temperature range			- 25 ~ 85 ℃
Protection class			IP65 ； DIN 40050
Weight		m	0.16 kg

Plug wiring diagram

Plug-in connector to DIN EN 175 201-804(See below)。

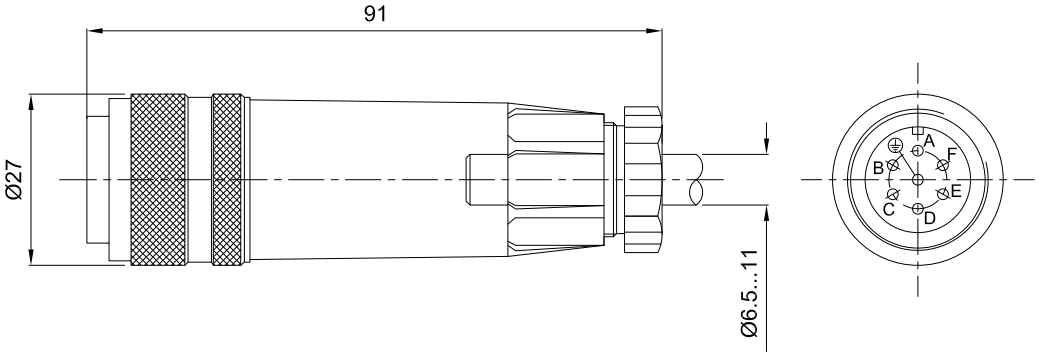

Plug wiring diagram

	Contact	Allocation interface A1	Allocation interface F1
Supply voltage	A	24 VDC (19 to 35VDC)	
	B	GND	
Differential amplifier input	D	± 10 V com. value	4...20 mA com. value
	E	ref. potential com. value	
Act. value	C	Act. value ±10V	
	F	Reference	
	PE	Connected with cooling body and valve housing	

Com. value: Positive command value (0 to 10 V or 12 to 20 mA) at D and reference potential to E causes flow from P to A and B to T.

Negative command value (0 to – 10 V or 12 to 4 mA) at D and reference potential to E causes flow from P to Band A to T.

Connection cable: Recommendation: – up to 25 m cable length type LiYCY 5 x 0.75 mm2

– up to 50 m cable length type LiYCY 5 x 1.0 mm2

External diameter 6.5 to 11 mm

Connect shield to PE only on the supply side.。

Notes

БЕЛИМПОРТСНАБ

Integrated Proportional Amplifier

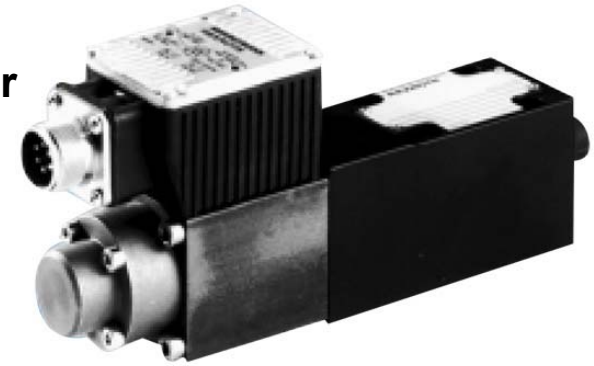

RT-(Z) DBEE-1X

Series: 3X

for valves type (Z)DBEE-1X

Block circuit diagram

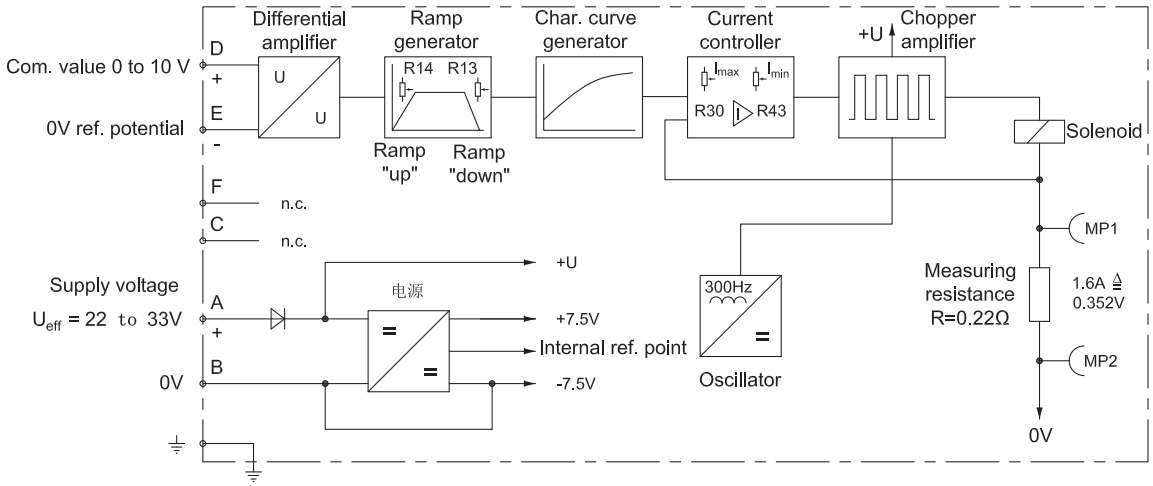

Function principle

The control of the integrated electronics is at the two differential amplifier ports D and E.

The ramp generator generates a delayed increase or decrease of the solenoid current from a command value jump (0 to 10 V or 10 to 0 V).

At the potentiometer R14 the increase time of the solenoid current may be set and the decrease time at potentiometer R13.

The maximum ramp time of 5 s is only possible over the complete command value range. With smaller command value changes, the ramp is shortened accordingly

The command value-solenoid current characteristic curve is adjusted to the valve via the characteristic curve generator in such a way that nonlinearities are compensated for in the hydraulics and thus a linear command value-pressure characteristic curve is formed.

The current controller controls the solenoid current independent from the solenoid coil resistance.

At the potentiometer R30 the increase of the command value-current characteristic curve and thus also the increase of the command value pressure characteristic curve of the proportional pressure valves may be altered

The potentiometer R43 is used for the setting of the bias current.

This setting should not be altered. If necessary, the

zero point of the command value-pressure characteristic curve may be set at the valve seat. The power stage of the electronics for the control of the proportional solenoid is formed by a chopper amplifier. It is pulse width modulated with a pulse frequency of 300 Hz.

Potentiometer R30 and R43 have been set up at the factory, if you change settings of these potentiometers and jumpers, the warranty will become void！

Odering code

RT-(Z)DBEE - 1X - 30 - CN

ReboTech

for valves (type (Z)DBEE)

10 to 19: (unchanged installation and connection dimensions) = 1X

30 = Design number

CN = Made in China

Further details in clear text

Plug wiring diagram

Plug-in connector to DIN EN 175 201-804(See below)。

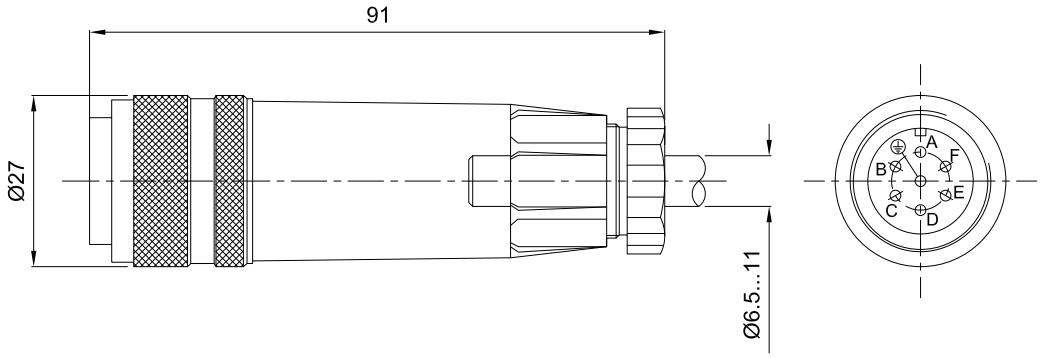

Plug wiring diagram

Supply voltage	A	19 to 35VDC
	B	0V (GND)
	C	N.C.
Differential amplifier input	D	Comm. value +10V；Re>50kΩ
	E	Reference
	F	N.C.
	PE	Connected with cooling body and valve housing

Supply voltage

Power supply with rectification

One-phase rectification or three-phase bridge:

U_{eff} = 19 to 35 V

Residual ripple factor at power supply: < 5 %

Output current: I_{eff} = max. 1.4 A

Supply cable: – Recommendation 5 core 0.75 or 1 mm^2 with protective conductor and screen

– External diameter 6.5 to 11 mm

– Screen on 0 V supply voltage

– Max. permissible length 100 m

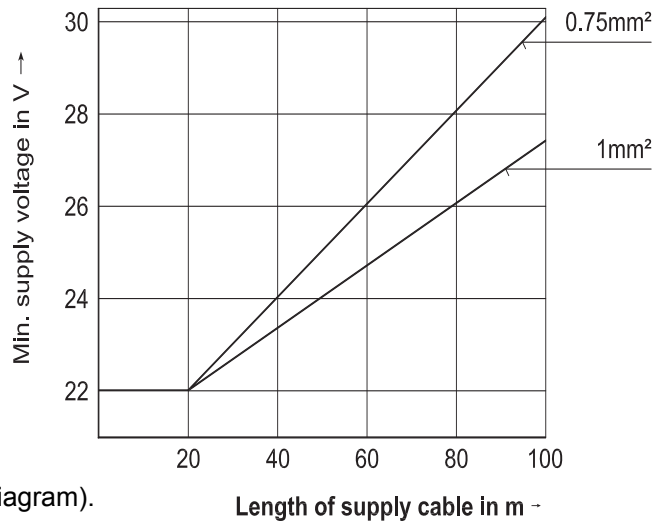

The minimum supply voltage at the power supply depends on the length of the supply cable (see diagram).

With lengths > 50 m a capacitor of 2200 μF must be installed near

БЕЛИМПОРТСНАБ

Integrated Proportional Amplifier

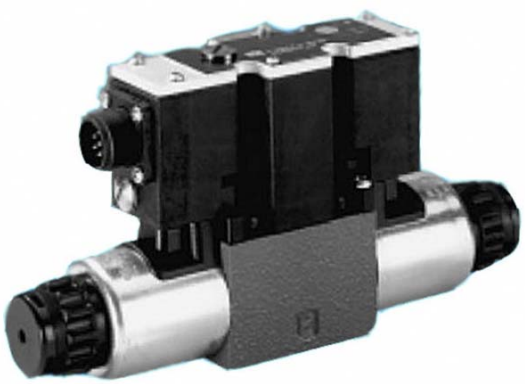

RT-3DREPE6-2X

Series: 3X

for valves type 3DREPE6-2X

Block circuit diagram

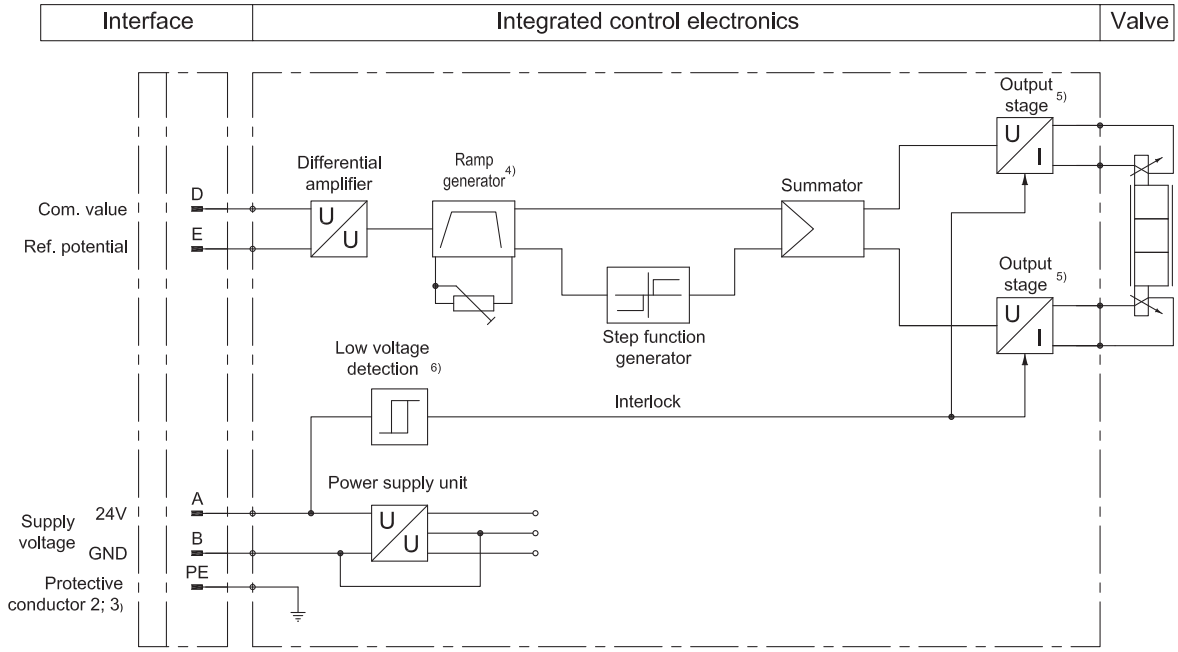

1) PE is connected to the cooling body and the valve housing

2) Ramp can be externally adjusted from 0 to 5 s;

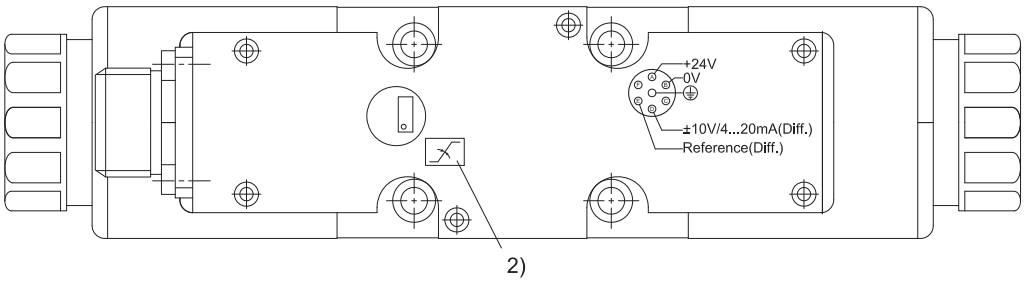

Odering code

RT-3DREPE6 - 2X / _ - 30 - CN

ReboTech

for valves (type 3DREPE6)

20 to 29: (unchanged installation and connection dimensions) = 2X

A1 = command value input ± 10 V

F1 = Command value input 4 to 20 mA

30 = Design number

CN = Made in China

Further details in clear text

Technical data (For applications beyond these parameters, please consult us!)

Operating voltage		U_B	24 VDC + 40 % - 20 %
—Upper limit value		$U_B(t)_{max}$	35 V
—Lower limit value		$U_B(t)_{min}$	19 V
Power consumption		P_s	<45 VA
Current consumption		I	< 2 A
Command value	A1	U_e	± 10 V，R_e > 50kΩ
	F1	I_e	4 to 20mA，R_e < 200Ω
Maximum output current		I_{max}	2.5 A ；$R_{(20)}$ = 2 Ω
Ramp time		t	0 ~ 5s
Type of connection			Socket;DIN 43650-AM2 Plug;E DIN 43563-BF6-3/PG11(should be ordered separately)
Permissible operating temperature range			- 20 ~ 80 ℃
Storage temperature range			- 25 ~ 85 ℃
Protection class			IP65 ；DIN 40050
Weight		m	0.14 kg

Plug wiring diagram

Plug-in connector to DIN EN 175 201-804(See below)。

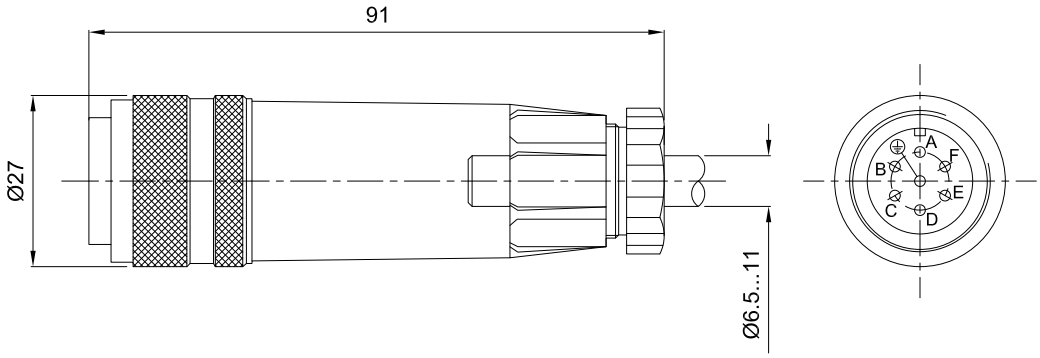

Plug wiring diagram

	Contact	Signal
Supply voltage	A B	24 VDC (19 to 35VDC) GND
	C	Missed 3)
Differential amplifier input	D E	com. value (±10V / 4-20mA) Reference
	F	Missed 3)

3) Slots C and F must not be connected!。

Command value: A positive command value (or 12 to 20 mA) at D and the reference potential at E results in pressure in A.
A negative command value (or 12 to 4 mA) at D and the reference potential at E results in pressure in B.
For a valve with one solenoid on side B (version A), a positive command value at D (4 to 20 mA) and the reference potential at E, results pressure in A and for a valve with one solenoid on side A(version B), a positive command value at D (4 to 20 mA) and the reference potential at E, results in pressure in B.

Connection cable: Recommended: – up to 25 m cable length type LiYCY 5 x 0.75 mm^2
– up to 50 m cable length type LiYCY 5 x 1.0 mm^2
Outside diameter 6.5 to 11 mm
Only attach the shield to PE on the supply side.

БЕЛИМПОРТСНАБ

Integrated Proportional Amplifier

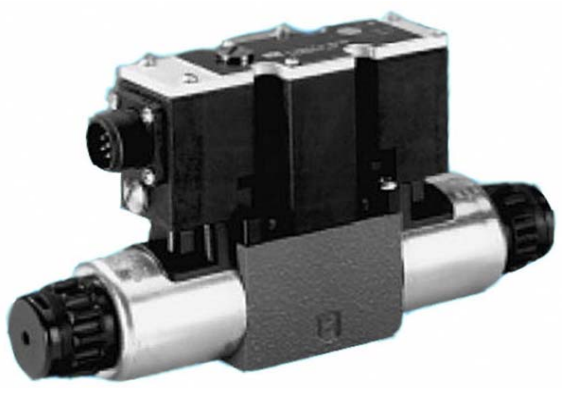

RT- 4WRAE.-2X

Series: 3X

for valves type 4WRAE. -2X

Block circuit diagram

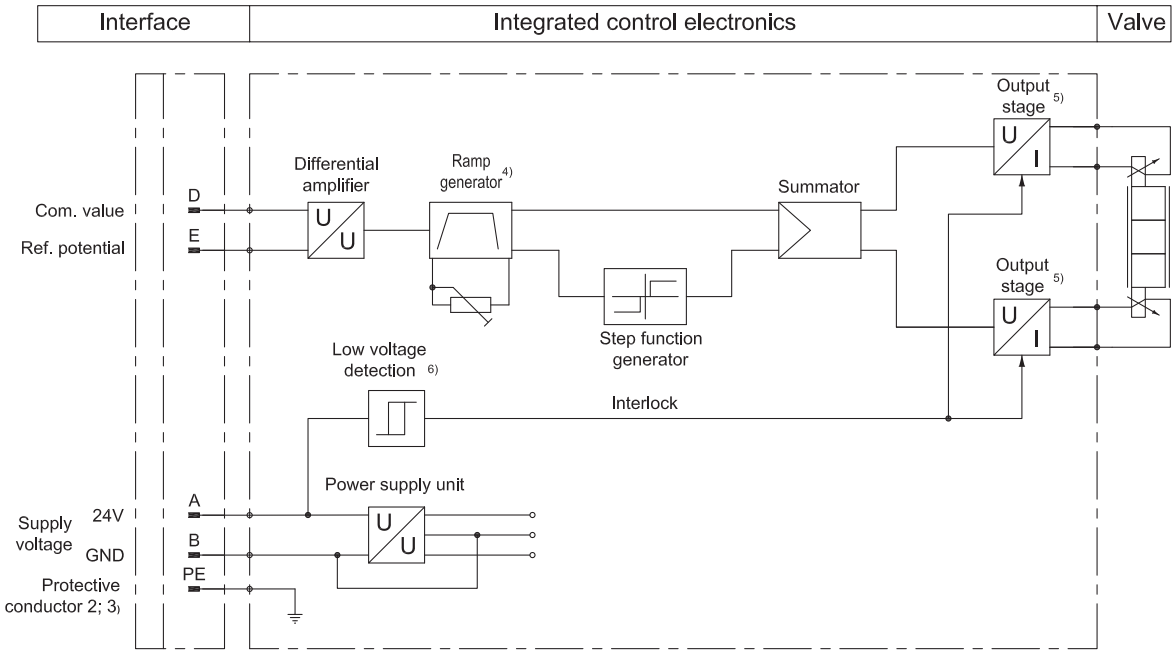

1) PE is connected to the cooling body and the valve housing

2) Ramp can be externally adjusted from 0 to 5 s;

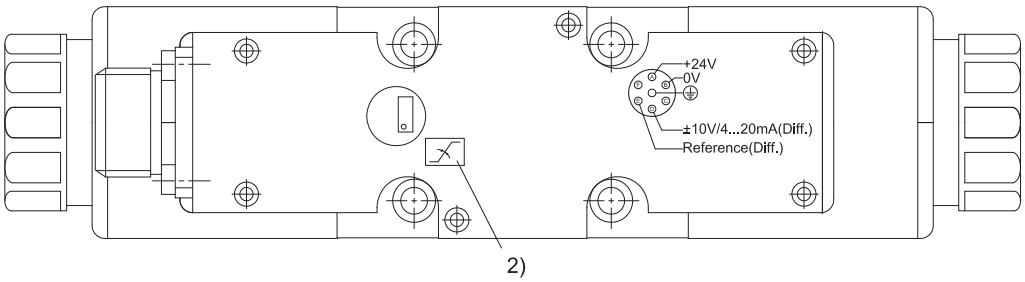

Odering code

RT-4WRAE _ -2X / _ - 30 - CN

***Rebo*Tech**

for valves (type 4WRAE6) = 6

for valves (type 4WRAE10) = 10

20 to 29: (unchanged installation and connection dimensions) = 2X

A1 = command value input ± 10 V

F1 = command value input 4 to 20 mA

30 = Design number

CN = Further details in clear text Made in China

Technical data (For applications beyond these parameters, please consult us!)

Operating voltage		U_B	24 VDC + 40 % - 20 %
—Upper limit value		$U_B(t)_{max}$	35 V
—Lower limit value		$U_B(t)_{min}$	19 V
Power consumption		P_s	<45 VA
Current consumption		I	< 2 A
Command value	A1	U_e	± 10 V，R_e > 50kΩ
	F1	I_e	4 to 20mA，R_e < 200Ω
Maximum output current		I_{max}	2.5 A ； $R_{(20)}$ = 2 Ω
Ramp time		t	0 ~ 5s
Type of connection			Socket;DIN 43650-AM2 Plug;E DIN 43563-BF6-3/PG11(should be ordered separately)
Permissible operating temperature range			- 20 ~ 80 ℃
Storage temperature range			- 25 ~ 85 ℃
Protection class			IP65 ； DIN 40050
Weight		m	0.14 kg

Plug wiring diagram

Plug-in connector to DIN EN 175 201-804(See below)。

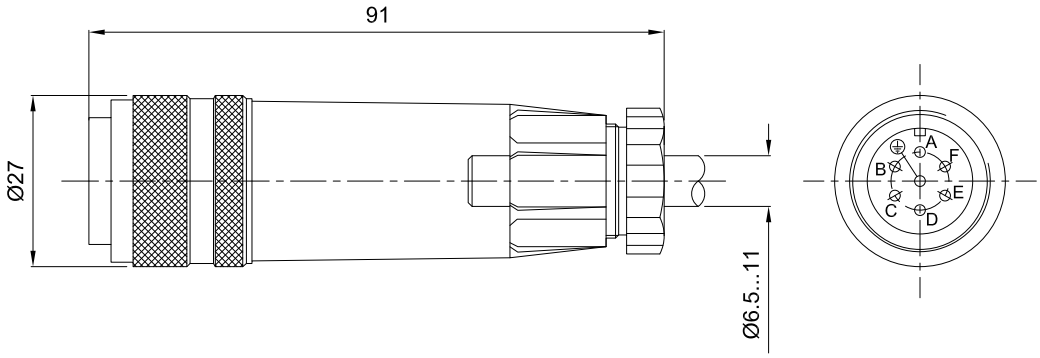

Plug wiring diagram

	Contact	Signal
Supply voltage	A B	24 VDC (19 to 35VDC) GND
	C	Missed 3)
Differential amplifier input	*D* *E*	com. value (±10V / 4-20mA) Reference
	F	Missed 3)

3) Slots C and F must not be connected!。

Com. value: Positive command value (0 to 10 V or 12 to 20 mA) at D and reference potential to E causes flow from P to A and B to T.

Negative command value (0 to – 10 V or 12 to 4 mA) at D and reference potential to E causes flow from P to Band A to T.

For valves with a solenoid on side „a“(spool variant **EA** and **WA**), reference potential to E and positive command value at D

(NS 6: 4 to 20 mA and NS 10: 12 to 20 mA) causes flow from P to B and A to T.

Connection cable: Recommendation: – up to 25 m cable length type LiYCY 5 x 0.75 mm2

– up to 50 m cable length type LiYCY 5 x 1.0 mm2

External diameter 6.5 to 11 mm

Connect shield to PE only on the supply side.。

БЕЛИМПОРТСНАБ

Integrated Proportional Amplifier

RT-4WRKE-3X

Series: 3X

for valves type 4WRKE-3X

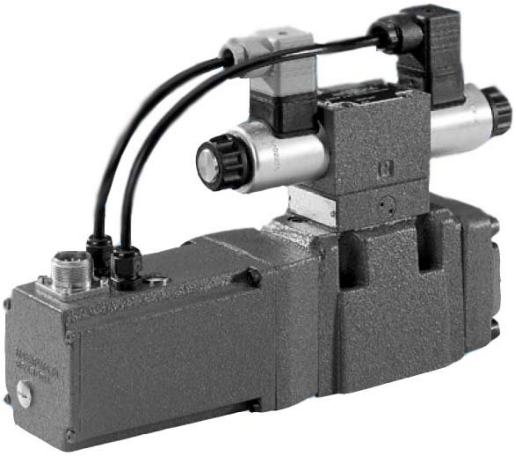

Block circuit diagram

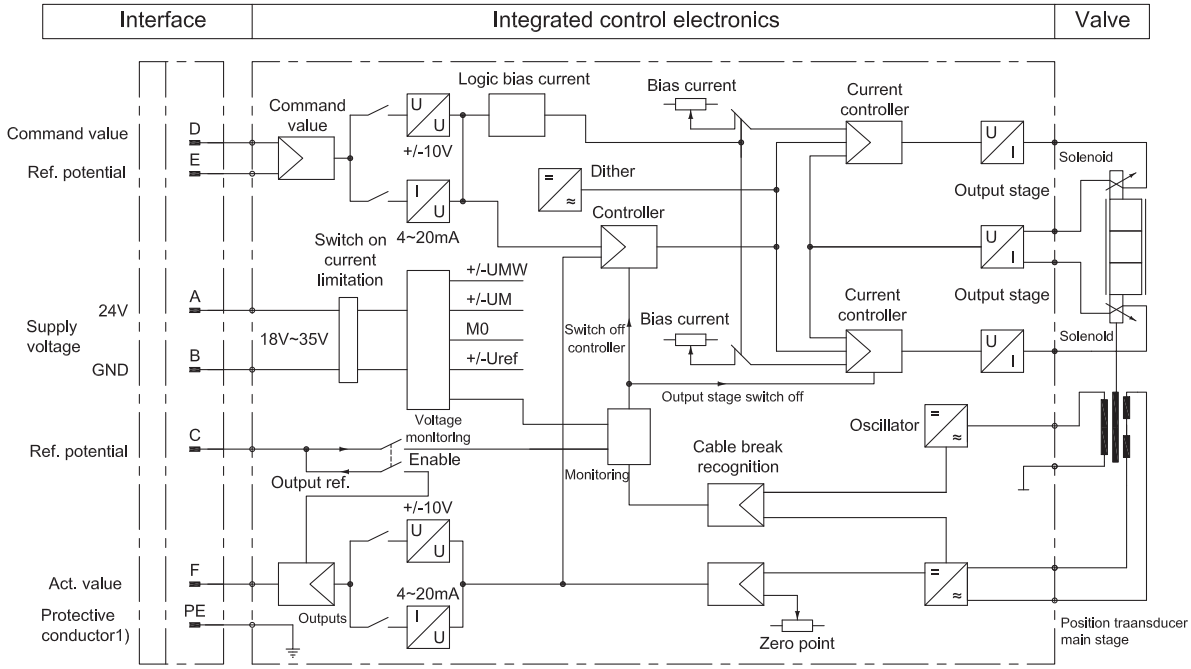

1) PE is connected to the cooling body and the valve housing

Note: Electrical signals (e.g. actual value or feedback signals) taken via valve electronics must not not switch off the machine safety functions!

(This is in accordance with the regulations of the European standard „Safety requirement of fluid technology systems and components – hydraulics“, EN 982!)

Ordering code

RT-4WRKE _ -3X / _ - 30 - CN

***Rebo*Tech**

for valves (type 4WRKE10)	= 10
for valves (type 4WRKE16)	= 16
for valves (type 4WRKE25)	= 25
for valves (type 4WRKE32)	= 32
for valves (type 4WRKE35)	= 35

20 to 29: (unchanged installation and connection dimensions) = 3X

A1 = command value input ± 10 V
F1 = command value input 4 to 20 mA

30 = Design number

Further details in clear text
CN = Made in China

Technical data (For applications beyond these parameters, please consult us!)

Operating voltage		U_B	24 VDC + 40 % - 20 %
—Upper limit value		$U_B(t)_{max}$	35 V
—Lower limit value		$U_B(t)_{min}$	19 V
Power consumption		P_s	<72 VA
Current consumption		I	< 2 A
Command value	A1	U_e	± 10 V，R_e > 50kΩ
	F1	I_e	4 to 20mA，R_e < 200Ω
Maximum output current		I_{max}	2.5 A ； $R_{(20)}$ = 2 Ω
Ramp time		t	0 ~ 5s
Type of connection			Socket;DIN 43650-AM2 Plug;E DIN 43563-BF6-3/PG11(should be ordered separately)
Permissible operating temperature range			- 20 ~ 80 ℃
Storage temperature range			- 25 ~ 85 ℃
Protection class			IP65 ； DIN 40050
Weight		m	0.14 kg

Plug wiring diagram

Plug-in connector to DIN EN 175 201-804(See below)。

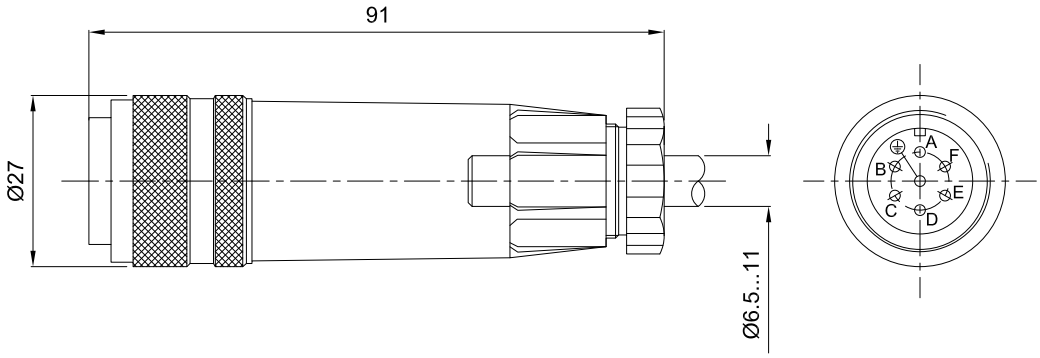

Plug wiring diagram

	Contact	Signal
Supply voltage	A B	24 VDC (19 to 35VDC) GND
Ref. (actual value)	C	Ref. potential for actual value (contact F)
Differential amplifier input (command value)	D E	10 V or 4 – 20 mA 0 V ref. potentional
Measurement output (act. value)	F	±10V / 4-20mA
	PE	Connected with cooling body and valve housing

Command value: Reference potential at E and a positive command value at D results in a flow from P to A and B to T

Reference potential at E and a negative command value at D results in a flow from P to B and A to T

Connection cable: Recommendation: – Up to 25 m cable length type LiYCY 5 x 0.75 mm^2

– Up to 50 m cable length type LiYCY 5 x 1.0 mm^2

External diameter: – 6.5 to 11 mm (plastic plug-in connection)

Only attach the shield to PE on the supply side.