Servo Valve Series

Contents

■ Contents：

Series	Picture	Specification Parameter	Page
Basic knowledge		Construction Principle	4
		Terminology	5
		Selection	7
		Type Code	11
SFL212 Series		Electro-hydraulic Flow Control Servo Valve	13
		Supply Pressure P_s= 2～25 MPa；Rated Supply Pressure P_n= 21 MPa	
		Rated Flow Q_n（⊿P=7 MPa）= 20 l/min；Rated Current I_n= 40 mA	
		Amplitude Ratio（-3dB）≥100 Hz；Phase Lag（-90°）≥100 Hz；	
SFL212A Series		Electro-hydraulic Flow Control Servo Valve	15
		Supply Pressure P_s= 2～28 MPa；Rated Supply Pressure P_n= 21 MPa	
		Rated Flow Q_n（⊿P=7 MPa）= 2;5;10 l/min；Rated Current I_n= 10 mA	
		Amplitude Ratio（-3dB）≥100 Hz；Phase Lag（-90°）≥100 Hz；	
SFL212B Series		Electro-hydraulic Flow Control Servo Valve	17
		Supply Pressure P_s= 2～31.5 MPa；Rated Supply Pressure P_n= 21 MPa	
		Rated Flow Q_n（⊿P=7 MPa）= 20 l/min；Rated Current I_n= 40 mA	
		Amplitude Ratio（-3dB）≥100 Hz；Phase Lag（-90°）≥100 Hz；	
SFP212 Series		Electro-hydraulic Pressure Control Servo Valve	19
		Spool rated Supply Pressure P_2= 21 MPa	
		Output pressure P_s= 0～21 MPa；Rated Current I_n= 20 mA	
		Amplitude Ratio（-3dB）≥40 Hz；Phase Lag（-90°）≥30 Hz；	
SFL214 Series		Electro-hydraulic Flow Control Servo Valve	21
		Supply Pressure P_s= 2～31.5 MPa；Rated Supply Pressure P_n= 21 MPa	
		Rated Flow Q_n（⊿P=7 MPa）= 100;150 l/min；Rated Current I_n= 40 mA	
		Amplitude Ratio（-3dB）≥35;30 Hz；Phase Lag（-90°）≥50;40 Hz；	
SFL216 Series		Electro-hydraulic Flow Control Servo Valve	23
		Supply Pressure P_s= 2～28 MPa；Rated Supply Pressure P_n= 21 MPa	
		Rated Flow Q_n（⊿P=7 MPa）= 230 l/min；Rated Current I_n= 40 mA	
		Amplitude Ratio（-3dB）≥30 Hz；Phase Lag（-90°）≥35 Hz；	
SFL218 Series		Electro-hydraulic Flow Control Servo Valve	25
		Supply Pressure P_s= 2～31.5 MPa；Rated Supply Pressure P_n= 21 MPa	
		Rated Flow Q_n（⊿P=7 MPa）= 4;10;20;40;60 l/min；Rated Current I_n= 40 mA	
		Amplitude Ratio（-3dB）≥80;50;40 Hz；Phase Lag（-90°）≥100;60;50 Hz；	
SFL218A Series		Electro-hydraulic Flow Control Servo Valve	27
		Supply Pressure P_s= 2～31.5 MPa；Rated Supply Pressure P_n= 21 MPa	
		Rated Flow Q_n（⊿P=7 MPa）= 40 l/min；Rated Current I_n= 40 mA	
		Amplitude Ratio（-3dB）≥50 Hz；Phase Lag（-90°）≥60 Hz；	
SFL218B Series		Electro-hydraulic Flow Control Servo Valve	29
		Supply Pressure P_s= 2～31.5 MPa；Rated Supply Pressure P_n= 21 MPa	
		Rated Flow Q_n（⊿P=7 MPa）= 40 l/min；Rated Current I_n= 40 mA	
		Amplitude Ratio（-3dB）≥50 Hz；Phase Lag（-90°）≥60 Hz；	

■ Contents：

Series	Picture	Specification Parameter	Page
SFL231Series		Electro-hydraulic Flow Control Servo Valve Supply Pressure P_s= 2～28 MPa；Rated Supply Pressure P_n= 21 MPa Rated Flow Q_n（⊿P=7 MPa）= 1;2;4;6;8 l/min；Rated Current I_n= 40 mA Amplitude Ratio（-3dB）≥60 Hz；Phase Lag（-90°）≥60 Hz；	31
SFD234 Series		Electro-hydraulic Flow Control Servo Valve Supply Pressure P_s= 2～35 MPa；Rated Supply Pressure P_n= 21 MPa Rated Flow Q_n（⊿P=7 MPa）=40,120,160 l/min；Rated Current I_n= 10 mA Amplitude Ratio（-3dB）≥95;75;75 Hz；Phase Lag（-90°）≥95;75;75 Hz；	33
SFL316 Series		Three-stage Electro-hydraulic Flow Control Servo Valve Supply Pressure P_s= 2～31.5 MPa；Rated Supply Pressure P_n= 21 MPa Rated Flow Q_n（⊿P=7 MPa）= 260 l/min；Rated Current I_n= 10 mA Amplitude Ratio（-3dB）≥100 Hz；Phase Lag（-90°）≥100 Hz；	35
SFL317 Series		Three-stage Electro-hydraulic Flow Control Servo Valve Supply Pressure P_s= 2～31.5 MPa；Rated Supply Pressure P_n= 21 MPa Rated Flow Q_n（⊿P=7 MPa）= 750 l/min；Rated Current I_n= 10 mA Amplitude Ratio（-3dB）≥100 Hz；Phase Lag（-90°）≥100 Hz；	37
SFZ141 Series		Direct Drive Electro-hydraulic Flow Control Servo Valve Supply Pressure P_s= 2～28 MPa；Rated Supply Pressure P_n= 21 MPa Rated Flow Q_n（⊿P=7 MPa）= 20 l/min；Rated Current I_n= 10 mA Amplitude Ratio（-3dB）≥30 Hz；Phase Lag（-90°）≥50 Hz；	39
SFZ142 Series		Direct Drive Electro-hydraulic Flow Control Servo Valve Supply Pressure P_s= 2～28 MPa；Rated Supply Pressure P_n= 21 MPa Rated Flow Q_n（⊿P=7 MPa）= 60 l/min；Rated Current I_n= 10 mA Amplitude Ratio（-3dB）≥30 Hz；Phase Lag（-90°）≥50 Hz；	41
Information		Performance Test System of Servo Valve Servo Amplifier	43 44

■ Construction principle of nozzle flapper type：

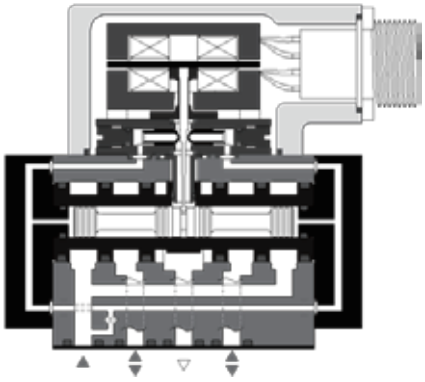

■ Construction principle of jet tube type：

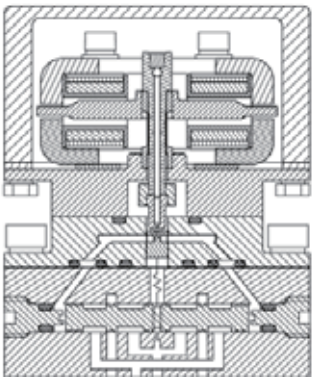

■ Construction principle of deflecting jet type：

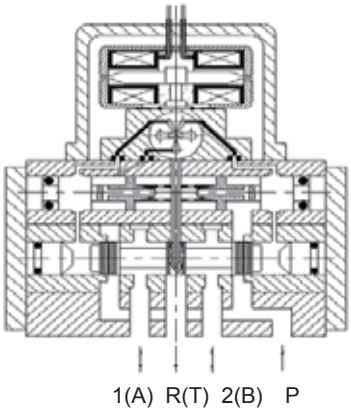

■ Construction principle of direct drive type：

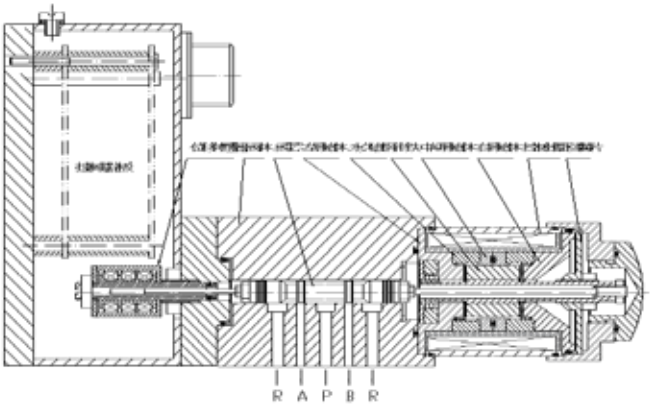

■ Construction principle of electrical feedback type：

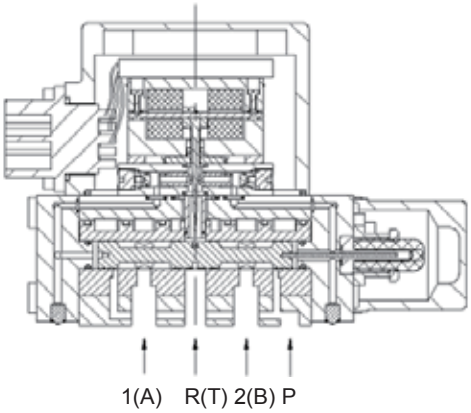

Rated current：

- It refers to input current of any polarity (excluding null bias current) required to generate the rated flow, represented by the symbol In and measured in mA.
- Generally, the rated current is based on single coil connection, differential connection or parallel connection. In case of series connection, the rated current is half of the above mentioned value.

Zero current：

- For differential connection of coils, zero current refers to the DC current passing through each coil when the differential current is zero.As the polarity of current in two coils is opposite, the electrical control power is zero.

Overcurrent：

- It refers to the maximum allowable current flowing through the torque motor coil. The recommended overcurrent is twice the rated current in the torque motor coil.

Coil resistance：

- It refers to DC resistance of each torque motor coil in Ω.

Rated flow：

- It corresponds to the control flow output specified by the rated current under the rated supply pressure, represented by the symbol Q_n and measured in L/min.
- Generally, the rated flow is the no-load flow corresponding to the rated current when the valve pressure drop is equal to the rated supply pressure.

Flow gain：

- It refers to the slope of flow curve in the specified working area expressed in L/ (min.mA).

Internal leakage：

- It refers to the flow from the return oil window under the rated supply pressure when the control flow is zero, expressed in L/min. The flow varies with control current, and the maximum value is internal leakage.

Hysteresis：

- The hysteresis is the ratio of the maximum difference between forward current and return current that generate the same control flow when the input current circulates between the positive and negative ratings at a speed lower than the dynamic characteristics, expressed in percentage (%).

Nonlinearity：

- It refers to the non-straightness of flow curve, namely the ratio of maximum deviation between nominal flow curve and nominal flow gain curve to the rated current, expressed in percentage (%).

Unsymmetry：

- It refers to the inconsistency between flow gains of two polarities, namely the ratio of difference between flow gains of two polarities to the higher gain, expressed in percentage (%).

Overlap：

- It refers to the axial positional relation between the fixed and moveable metering edges. For servo valve, the overlap is calculated as below: after the extended line of nominal flow curve similar to the straight line portion is drawn for each polarity, the overlap is the ratio of total spacing current between zero-flow points on the two extended lines to the rated current, expressed in percentage (%).

Pressure gain：

- It is the change rate of load pressure drop with respect to input current when the control flow is zero, expressed in MPa/mA.
- Generally, pressure gain is defined as average slope of the load pressure drop-input current relation curve within ±40% of the maximum load pressure drop. When general servo valve is in the zero (null) position, pressure gain is the percentage of load pressure drop at input current variation of 1% rated current to the rated supply pressure.

Null bias：

- It is the ratio of input current required for returning valve to the null position (hysteresis neglected) to the rated current, expressed in percentage (%).

Threshold：

- It refers to the minimum gain of input current required for changing the control flow of valve. It varies with the size and residence time of input current.
- Threshold is defined as the ratio of maximum current gain to the rated current, expressed in percentage (%).

Frequency response：

- It refers to the plural ratio of no-load control flow to input current varying sinusoidally in a certain frequency range.
- Generally, frequency response is measured by amplitude ratio and phase lag under fixed input current amplitude and zero load pressure drop, and expressed in logarithmic frequency response.

Selection of Servo Valve：

- Attention should be paid to the following for selection of electro-hydraulic servo valve：

Hydraulic characteristics：

Supply pressure：

- The servo valve should run normally in the supply pressure range of (2～35) MPa;
- Except the rated flow, all performance indices of samples should be tested under 21 MPa;
- Threshold and dynamic response of servo valves, other than direct drive valve, become worse with decrease of supply pressure;
- Null bias will vary if the servo valve does not work under the rated pressure;
- Under supply pressure other than the rated level, actual flow of servo valve is calculated by the formula below:

$$Q = Q_n \sqrt{\frac{P}{P_n}}$$

Wherein

Q：Actual flow under supply pressure P;

Q_n：Rated flow;

P：Actual supply pressure;

P_n：Rated supply pressure.

Return pressure：

- Return pressure may vary within certain range (no higher than 5 MPa), but its variation will cause null shift of servo valve;
- Return pressure is not allowed to be higher than supply pressure to avoid back flow to hydraulic amplifier stage.

Proof pressure and breakdown pressure：

- Proof pressure：
  Oil inlet and load window=1.5P_n
  Return oil window=1.0P_n
- Breakdown pressure：
  Oil inlet and load window =2.5P_n
  Return oil window =1.5P_n or 35MPa to the maximum.

Working fluid and the corresponding sealing material：

- Petroleum base hydraulic oil—NBR/fluororubber;
- Jet fuel：NBR/fluororubber;
- Phosphate：EPDM.

Contamination degree of working fluid：

- The degree of contamination of working fluid should be superior to NAS1638-6;
- otherwise, service life of servo valve will be impaired.

Electrical characteristics：

Connector assembly：

- Universal electrical connector assembly is supplied generally, and the dedicated connector assembly can be provided upon request of the user;
- The connector assembly has four optional directions, and will be designed as shown in the diagram of overall dimensions if the user has no special requirements.

Coil/socket connection：

- The coil lead is connected with the socket as shown below:

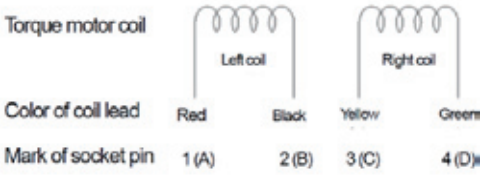

Flutter：

- Flutter is defined as the vibration added to input signal to improve servo valve characteristics;
- Performance of the sample servo valve is measured under Mark of socket pin dition;
- Adding flutter can improve the hysteresis and threshold of servo valve, but will increase internal leakage;
- The frequency of flutter is generally (100～400)Hz, and amplitude (10～20) %I_n.

Servo amplifier：

- Servo amplifier is defined as the amplifier that receives commands and outputs current for the torque motor coil of servo valve;
- Servo amplifier should adopt the deep current negative feedback to eliminate gain variation and phase lag of servo valve caused by variation in the coil impedance.

Static characteristics：

Polarity：

- Positive polarity of input current
  - Single coil:1(A)+， 2(B)-; 3(C)+, 4(D)-
  - Series coil: 1(A)+, 4(D)-; 2(B) connected with 3(C)
  - Parallel coil: 1(A) connected with 3(C), and 2(B) with 4(D)
- Definition: For input of positive polarity current, the flow direction of "P→2(B), 1(A)→R(T)" is defined as positive flow polarity.

No-load flow characteristics：

- Definition: Measured when the load window is open (no load);
- Rated flow, hysteresis, null bias, nonlinearity, unsymmetry and other indices of servo valve can be derived from the no-load flow curve;
- In the areas ±3% of null position, the variation range of flow gain of zero-overlap (±2.5%) servo valve is (50～200)% of nominal flow gain.

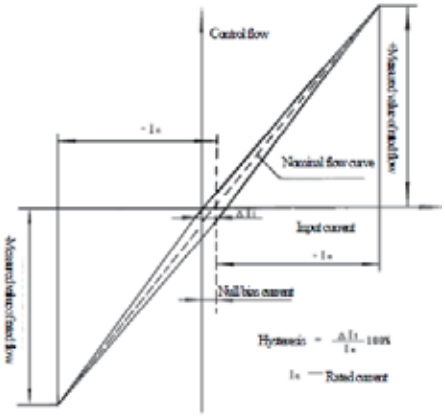

No-load flow curve

Null bias：

- (1) Null bias is measured under standard test conditions after hysteresis of servo valve is eliminated;
- (2) Null bias of servo valve is allowed to be up to 6% in the useful life.

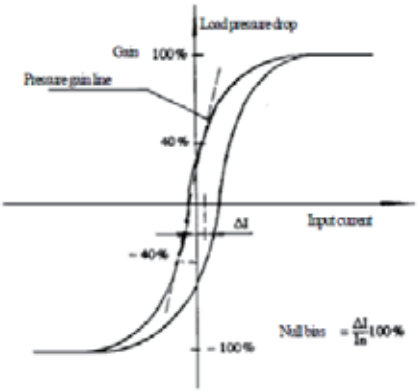

Characteristic curve of pressure

Internal leakage characteristics：

- Definition: Measured when the load window is closed;
- Internal leakage, null leakage and constant leakage of servo valve can be derived from the internal leakage characteristic curve;
- Null leakage of servo valve increases with wearing of the working edge.

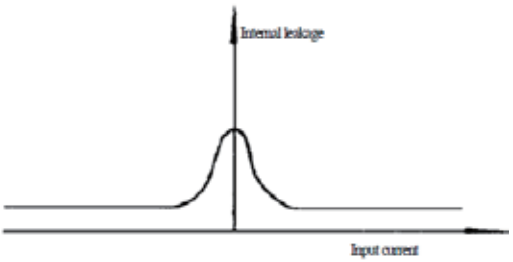

Load characteristics：

- Definition：Measured under the give supply pressure and different input signals by changing the load pressure drop;
- Working point of servo valve can be derived from the load characteristic curve.

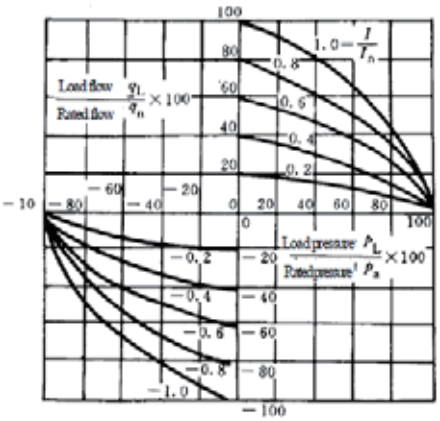

Load characteristic curve

Threshold：

- Definition: Measured near the null position (10%I_n);
- Threshold of servo valve becomes worse with decrease of supply pressure, wearing of the working edge and contamination of working fluid.

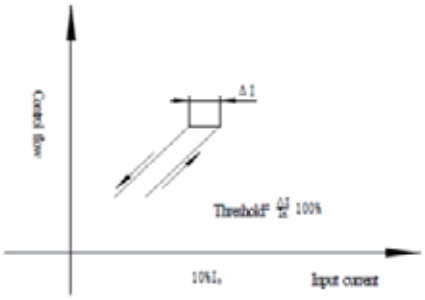

Threshold curve

Null bias：

- Null bias is measured under standard test conditions after hysteresis of servo valve is eliminated;
- Null bias of servo valve is allowed to be up to 6% in the useful life.

Overlap：

- Zero overlap of servo valve as default; actual overlap within ±2.5% rated current;
- Positive overlap of servo valve: Null flow gain and null leakage are decreased, and pressure gain impaired;
- Negative overlap of servo valve: Null flow gain and null leakage are increased, while pressure gain decreased.

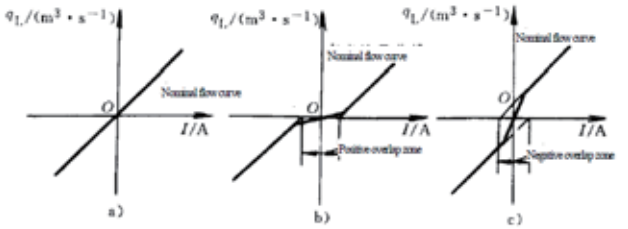

a) Zero overlap b) Positive overlap c) Negative overlap

Dynamic characteristics：

Transfer function：

- When bandwidth of the selected servo valve is much higher than operating frequency of the system, the following function can be used for calculation of dynamic characteristics：

$$\frac{Q}{I}(s)=\frac{K}{TS+1}$$

- When bandwidth of the selected servo valve is equal to operating frequency of the system, the following function can be used for calculation of dynamic characteristics：

$$\frac{Q}{I}(s)=\frac{K}{\left(\frac{S}{\omega}\right)^2+\frac{2\xi}{\omega}s+1}$$

Wherein：

Q：Output flow (L/min); I：Input current (mA);

K：Flow gain of servo valve [L/(min · mA)];

T：Time constant of servo valve (sec);

ω：Inherent frequency of servo valve as the second-order element (rad/s);

ξ： Damping coefficient of servo valve as the second-order element.

Frequency response：

- Definition: Measured under open load (no load), the given supply pressure and different input signals;
- Amplitude ratio and phase lag of servo valve can be derived from the characteristic curve of frequency;
- Frequency response amplitude ratio of servo valve should be no more than +2dB.

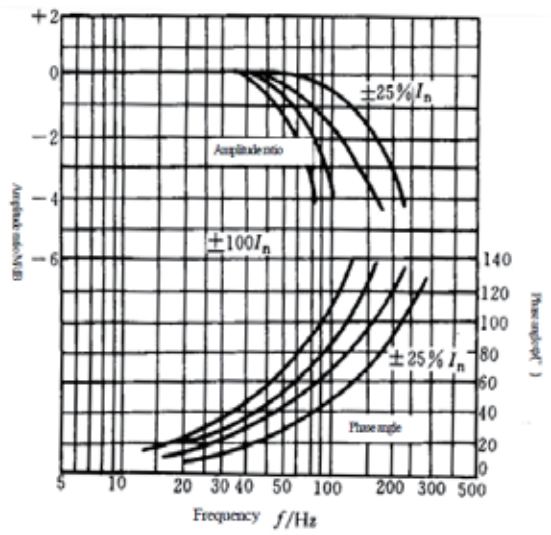

Characteristic curve of frequency

Instructions for Use

- For the mounting base of servo valve, the surface roughness should be lower than 1.6, and flatness less than 0.01mm. High flatness may cause deformation of servo valve casing and relevant precision parts, increase the frictional force of sliding valve and impair the performance of servo valve. The mounting base should be clean and free of any dirt. Attention should be paid to prevent mounting servo valve on any machine parts subject to strong vibration or abrupt movement. The axis of valve core should not be in the moving direction of machine parts if it is unavoidable to mount servo valve on the machine parts subject to abrupt movement.
- As the torque motor is designed with permanent magnetic steel, there should be no strong electromagnetic interference field near the servo valve.
- The oil tank should be sealed; oil inlet of the servo valve should be provided with an oil filter with absolute filtering precision≤10 μm; after oil replacement, cleaning block should be used for circulating till contamination level of the working fluid meets the requirement for mounting of servo valve;
- Besides the level of contamination, the hydraulic source should meet the following requirements：
  - The pressure pulsation amplitude of hydraulic source should be low as possible, as high amplitude may cause howling of servo valve and lead to break of spring tube of the torque motor under certain conditions.
  - The hydraulic source should be provided with a proper cooling system. Oil temperature should be controlled within certain range during operation. Changing or excessively high oil temperature will impair the performance and service life of servo valve.
  - If the hydraulic source uses a constant pressure variable pump, the oil supply system should be equipped with a high-capacity oil accumulator, as instantaneous flow of servo valve varies significantly during system operation, and such varying flow can only be supplemented by an accumulator, but not instantly by a variable pump with variable displacement mechanism of slow response.

■ Type Code For Standard Program：

Serial No.							Order parameters					
SF	L	2	1	8	A	-	100	/	25	/	40	A
1	2	3	4	5	6		7		8		9	10

1. Series：

Series：	Code
Servo valve	SF

2. Type：

Servo valve type：	Code
Force feedback servo valve	L
Electrical feedback servo valve	D
Pressure servo valve	P
Direct drive servo valve	Z

3. Stages：

Servo valve stages：		Code
Single stage	direct drive	1
2 stages		2
3 stages		3

4. Pre-stage：

Servo valve Pre-stage：	Code
Nozzle flapper type	1
Deflecting jet type	2
Jet pipe type	3
Direct drive type	4

5. Core：

Valve core diameter series：	Code
See technical parameter list	-

6. Structure：

Hydraulic interface and structure：		Code
Universal interface, default	Empty	-
Special interface and interface series	A;B;C	-

■ Type Code For Standard Program：

Serial No.							Order parameters					
SF	L	2	1	8	A	-	100	/	25	/	40	A
1	2	3	4	5	6		7		8		9	10

7. No-load flow：

Servo valve No-load flow：		Code
See technical parameter list	l/min (test result @ 7MPa) if not specified	-

8. Pressure：

Servo valve pressure：		Code
See technical parameter list	Max. pressure (MPa)	-

9. Input signal：

Servo valve Input signal：		Code
See technical parameter list	Current mA / Voltage V	-

10. Seals：

Servo valve Seals：		Code
NBR	Nitrile Butadiene Rubber -40℃～+135℃	A
FKM	Fluor Caoutchouc -20℃～+180℃	B

■ For example：

- Serial No.：nozzle flapper type two-stage flow control servo valve with universal interface as the default hydraulic interface；
- Order parameters：ated flow 100 L/min (test under pressure drop of 7 MPa), maximum pressure 25 MPa, rated current ±40mA, seal material NBR (nitrile butadiene rubber)。
- Type Code For Standard Program：SFL218-100/25/40A

■ SFL212 Series：

- ◻ Electro-hydraulic Flow Control Servo Valve；
- ◻ Rated flow Q_n（⊿P=7 MPa）：20 l/min

■ Performance indices：

Item		Unit	Index
Supply pressure P_s		MPa	2～25
Rated supply pressure P_n		MPa	21
Rated flow Q_n（⊿P=7 MPa）		l/min	20
Rated current I_n		mA	40
Hysteresis		%	≤4
Threshold		%	≤0.5
Nonlinearity		%	≤±5
Unsymmetry		%	≤±5
Pressure gain		%	＞30
Internal leakage		l/min	≤2.0
Null bias		%	≤±1
Null shift with temperature（⊿T=56℃）		%	≤±2
Null shift with supply pressure of（80～110%）P_n		%	≤±2
Null shift with return pressure of（0～20%）P_n		%	≤±2
Frequency response	Amplitude ratio with（-3dB）	Hz	≥100
	Phase lag with（-90°）	Hz	≥100
Working temperature		℃	-15～100
Weight		kg	≈0.4

■ Electrical interface：

Item	Unit	Single coil	Parallel coil	Series coil
Coil resistance	Ω	100	50	200
Rated current	mA	40	40	20
Coil inductance	H	1	0.5	2

■ SFL212 Series：

□ Electro-hydraulic Flow Control Servo Valve；

■ Overall dimensions（mm）：

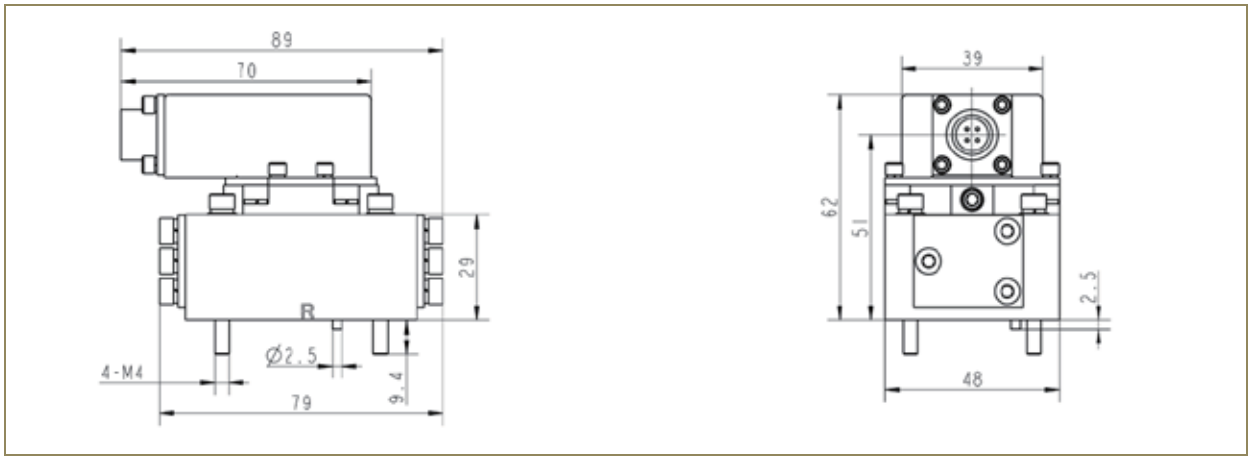

■ Installation dimensions（mm）：

□ Requirement: Flatness less than 0.01mm；roughness below 1.6；

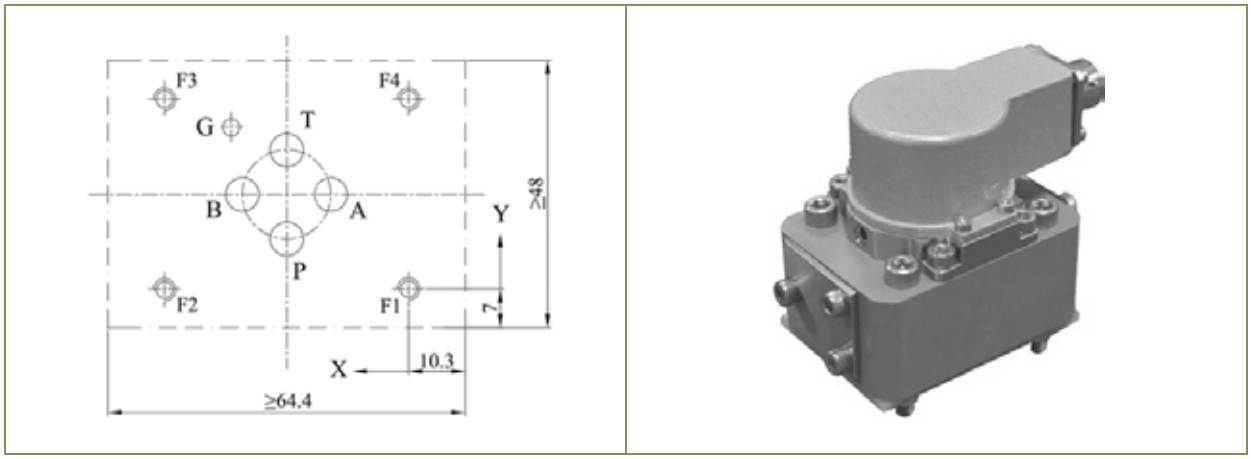

0	P	A	B	T	G	F1	F2	F3	F4
	Φ5	Φ5	Φ5	Φ5	Φ3	M4	M4	M4	M4
X	22	14	30	22	32	0	44	44	0
Y	9	17	17	25	29	0	0	34	34

■ SFL212A Series：

- Electro-hydraulic Flow Control Servo Valve；
- Rated flow Q_n（⊿P=7 MPa）：2 ;5;10 l/min

■ Performance indices：

Item		Unit	Index
Supply pressure P_s		MPa	2～28
Rated supply pressure P_n		MPa	21
Rated flow Q_n（⊿P=7 MPa）		l/min	2;5;10
Rated current I_n		mA	10
Hysteresis		%	≤3
Threshold		%	≤0.5
Nonlinearity		%	≤±5
Unsymmetry		%	≤±5
Pressure gain		%	＞30
Internal leakage		l/min	≤0.5;0.6;1
Null bias		%	≤±2
Null shift with temperature（⊿T=56℃）		%	≤±2
Null shift with supply pressure of（80～110%）P_n		%	≤±2
Null shift with return pressure of（0～20%）P_n		%	≤±2
Frequency response	Amplitude ratio with（-3dB）	Hz	≥100
	Phase lag with（-90°）	Hz	≥100
Working temperature		℃	-15～100
Weight		kg	≈0.45

■ Electrical interface：

Item	Unit	Single coil	Parallel coil	Series coil
Coil resistance	Ω	800	400	1600
Rated current	mA	10	10	5
Coil inductance	H	1	0.5	2

■ SFL212A Series：

□ Electro-hydraulic Flow Control Servo Valve；

■ Overall dimensions（mm）：

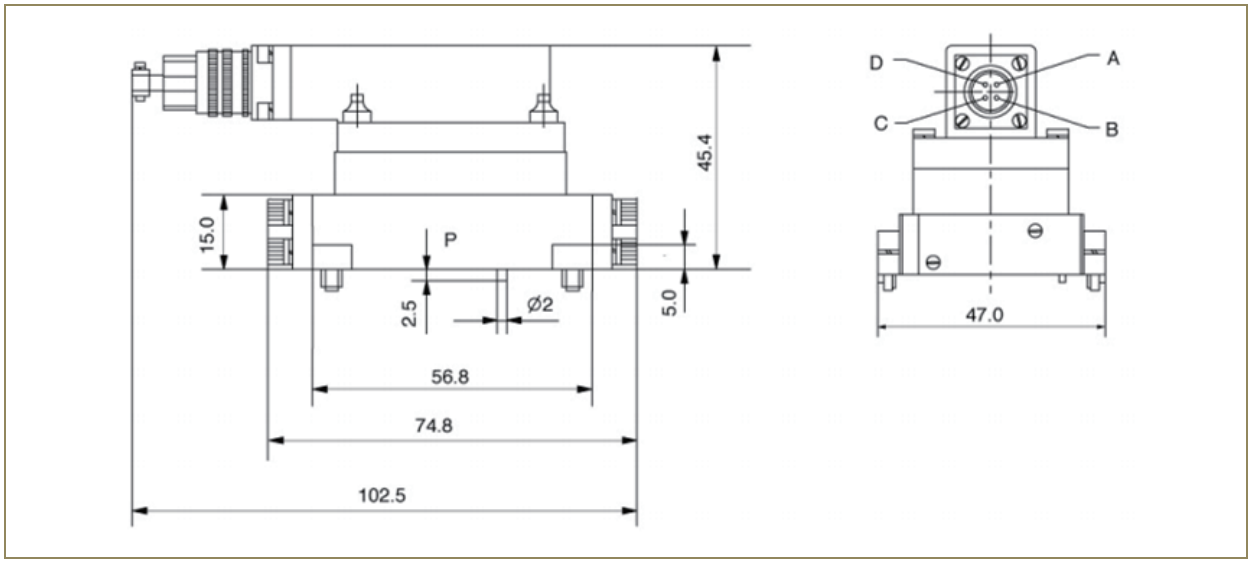

■ Installation dimensions（mm）：

□ Requirement: Flatness less than 0.01mm；roughness below 1.6；

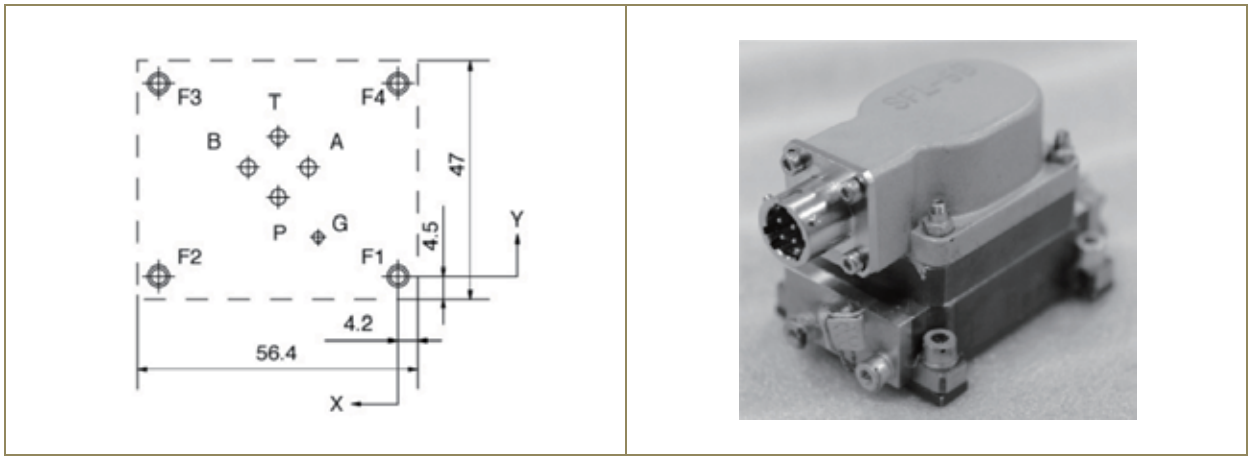

0	P	A	B	T	G	F1	F2	F3	F4
	Φ3	Φ3	Φ3	Φ3	Φ2.5	M4	M4	M4	M4
X	22	24	18	30	24	14	0	48	48
Y	9	15.5	21.5	21.5	27.5	7	0	0	38

■ SFL212B Series：

- ◻ Electro-hydraulic Flow Control Servo Valve；
- ◻ Rated flow Q_n（⊿P=7 MPa）：20 l/min

■ Performance indices：

Item		Unit	Index
Supply pressure P_s		MPa	2～31.5
Rated supply pressure P_n		MPa	21
Rated flow Q_n（⊿P=7 MPa）		l/min	20
Rated current I_n		mA	40
Hysteresis		%	≤4
Threshold		%	≤0.5
Nonlinearity		%	≤±5
Unsymmetry		%	≤±5
Pressure gain		%	＞30
Internal leakage		l/min	≤2.0
Null bias		%	≤±1
Null shift with temperature（⊿T=56℃）		%	≤±2
Null shift with supply pressure of（80～110%）P_n		%	≤±2
Null shift with return pressure of（0～20%）P_n		%	≤±2
Frequency response	Amplitude ratio with（-3dB）	Hz	≥100
	Phase lag with（-90°）	Hz	≥100
Working temperature		℃	-15～100
Weight		kg	≈0.4

■ Electrical interface：

Item	Unit	Single coil	Parallel coil	Series coil
Coil resistance	Ω	100	50	200
Rated current	mA	40	40	20
Coil inductance	H	1	0.5	2

■ SFL212B Series：

□ Electro-hydraulic Flow Control Servo Valve；

■ Overall dimensions（mm）：

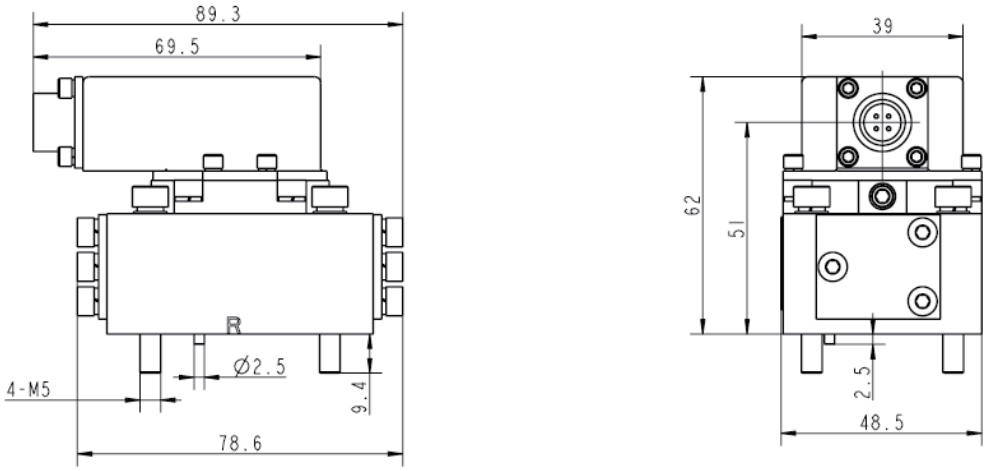

■ Installation dimensions（mm）：

□ Requirement: Flatness less than 0.01mm；roughness below 1.6；

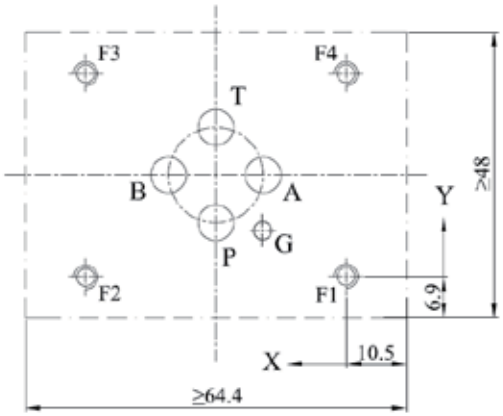

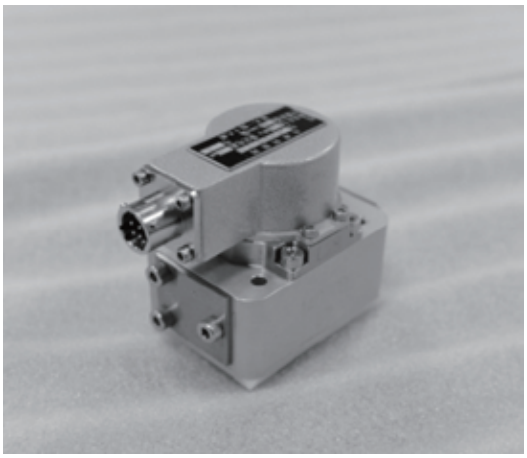

0	P	A	B	T	G	F1	F2	F3	F4
	Φ5	Φ5	Φ5	Φ5	Φ3	M5	M5	M5	M5
X	21.7	11.8	31.6	21.7	11.8	0	43.4	43.4	0
Y	7.2	17.1	17.1	27	4.3	0	0	34.2	34.2

■ SFP212 Series：

- Electro-hydraulic Pressure Control Servo Valve；
- Output Pressure 0～21 MPa

■ Performance indices：

Item		Unit	Index
Spool rated supply pressure P_2		MPa	21
Rated current I_n		mA	20
Hysteresis		%	≤4
Output pressure P_S		MPa	0～21
Null bias		mA	0～1
Threshold		%	≤1
Nonlinearity		%	≤±2
Unsymmetry		%	≤±7.5
Max return flow		%	≥10
Internal leakage		l/min	≤0.5
Null shift with temperature（⊿T=56℃）		%	≤±2
Null shift with supply pressure of（80～110%）P_n		%	≤±4
Null shift with return pressure of（0～20%）P_n		%	≤±4
Frequency response	Amplitude ratio with（-3dB）	Hz	≥40
	Phase lag with（-90°）	Hz	≥30
Working temperature		℃	-15～100
Weight		kg	≈0.5

■ Electrical interface：

Item	Unit	Single coil	Parallel coil	Series coil
Coil resistance	Ω	310	155	620
Rated current	mA	20	20	10
Coil inductance	H	1	0.5	2

■ SFP212 Series：

□ Electro-hydraulic Pressure Control Servo Valve；

■ Overall dimensions（mm）：

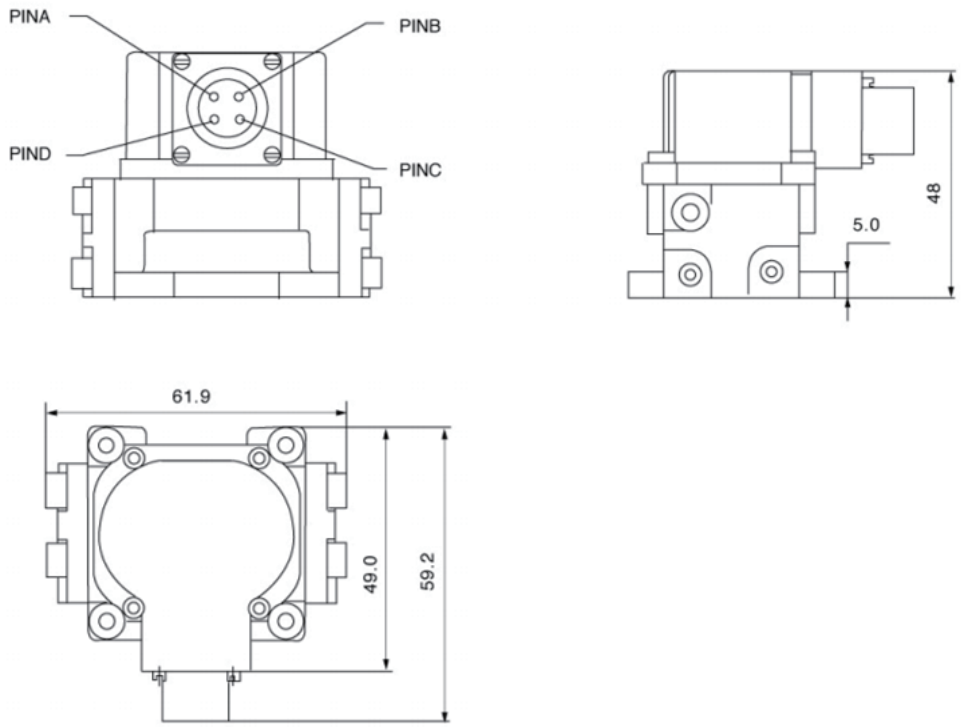

■ Installation dimensions（mm）：

□ Requirement: Flatness less than 0.01mm；roughness below 1.6；

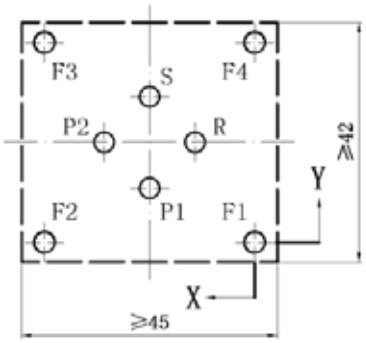

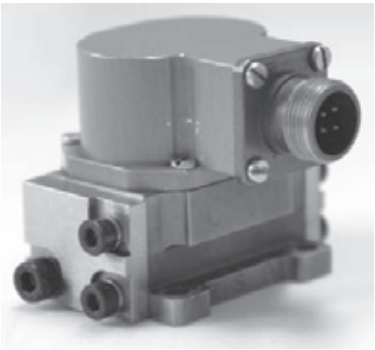

0	P1	P2	S	R	F1	F2	F3	F4	
	Φ3.5	Φ3.5	Φ3.5	Φ3.5	M4	M4	M4	M4	
X	18.5	26.5	18.5	10.5	0	37	37	0	
Y	9.5	17.5	25.5	17.5	0	0	35	35	

■ SFL214 Series：

- ◻ Electro-hydraulic Flow Control Servo Valve；
- ◻ Rated flow Q_n（⊿P=7 MPa）：100;150 l/min

■ Performance indices：

Item		Unit	Index
Supply pressure P_s		MPa	2～31.5
Rated supply pressure P_n		MPa	21
Rated flow Q_n（⊿P=7 MPa）		l/min	100,150
Rated current I_n		mA	40
Hysteresis		%	≤4
Threshold		%	≤0.5
Nonlinearity		%	≤±7.5
Unsymmetry		%	≤±7.5
Pressure gain		%	＞30
Internal leakage		l/min	≤3,4
Null bias		%	≤±2
Null shift with temperature（⊿T=56℃）		%	≤±2
Null shift with supply pressure of（80～110%）P_n		%	≤±2
Null shift with return pressure of（0～20%）P_n		%	≤±2
Frequency response	Amplitude ratio with（-3dB）	Hz	≥35,30
	Phase lag with（-90°）	Hz	≥50,40
Working temperature		℃	-15～100
Weight		kg	≈1.2

■ Electrical interface：

Item	Unit	Single coil	Parallel coil	Series coil
Coil resistance	Ω	80	40	160
Rated current	mA	40	40	20
Coil inductance	H	0.72	0.36	1.44

■ SFL214 Series：

□ Electro-hydraulic Flow Control Servo Valve；

■ Overall dimensions（mm）：

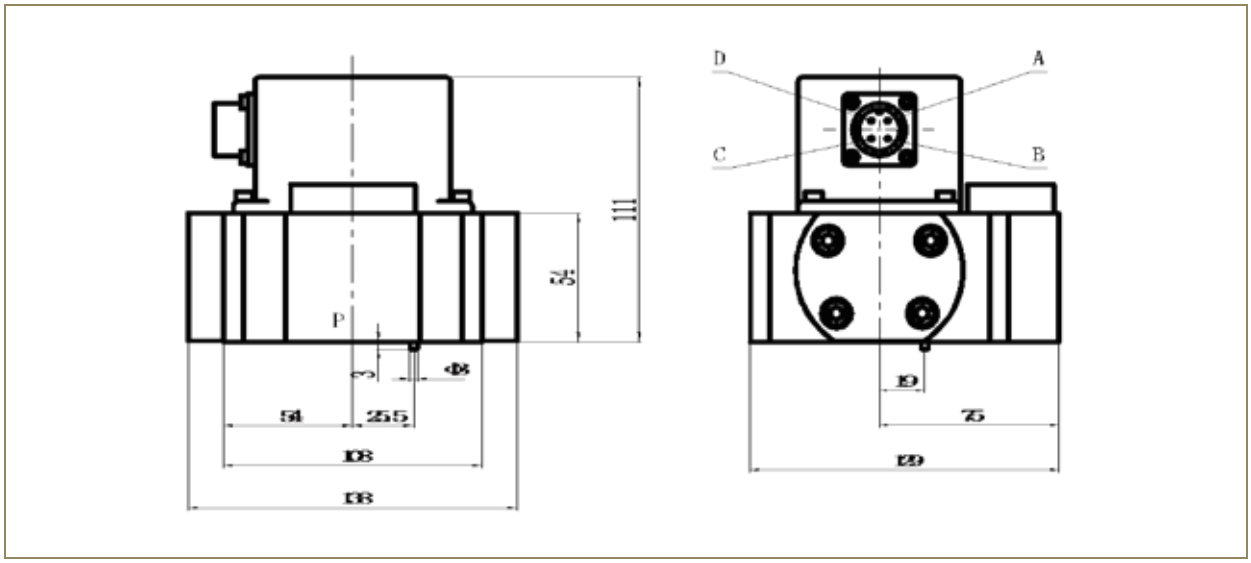

■ Installation dimensions（mm）：

□ Requirement: Flatness less than 0.01mm；roughness below 1.6；

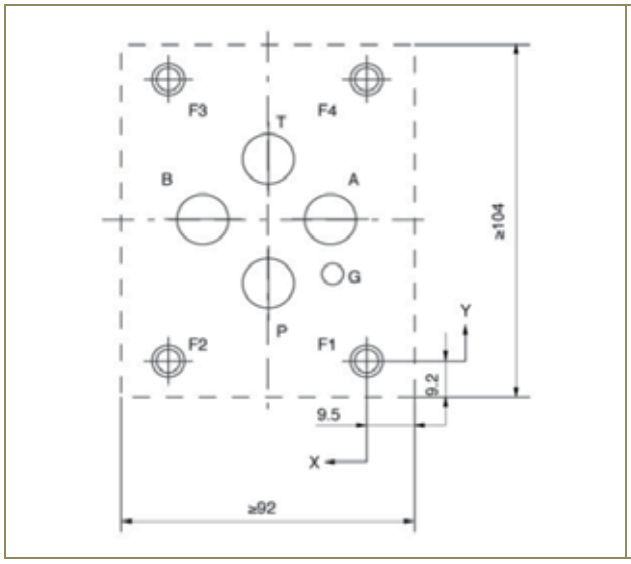

0	P	A	B	T	G	F1	F2	F3	F4
	Φ16	Φ16	Φ16	Φ16	Φ4	M10	M10	M10	M10
X	36.5	11.1	61.9	36.5	11.1	0	73	73	0
Y	17.4	42.8	42.8	68.2	23.7	0	0	85.6	85.6

■ SFL216 Series：

- ◻ Electro-hydraulic Flow Control Servo Valve；
- ◻ Rated flow Q_n（⊿P=7 MPa）：230 l/min

■ Performance indices：

Item		Unit	Index
Supply pressure P_s		MPa	2～28
Rated supply pressure P_n		MPa	21
Rated flow Q_n（⊿P=7 MPa）		l/min	230
Rated current I_n		mA	40
Hysteresis		%	≤4
Threshold		%	≤0.5
Nonlinearity		%	≤±7.5
Unsymmetry		%	≤±7.5
Pressure gain		%	＞30
Internal leakage		l/min	≤4.5
Null bias		%	≤±2
Null shift with temperature（⊿T=56℃）		%	≤±2
Null shift with supply pressure of（80～110%）P_n		%	≤±2
Null shift with return pressure of（0～20%）P_n		%	≤±2
Frequency response	Amplitude ratio with（-3dB）	Hz	≥30
	Phase lag with（-90°）	Hz	≥35
Working temperature		℃	-15～100
Weight		kg	≈1.5

■ Electrical interface：

Item	Unit	Single coil	Parallel coil	Series coil
Coil resistance	Ω	80	40	160
Rated current	mA	40	40	20
Coil inductance	H	0.72	0.36	1.44

■ SFL216 Series：

□ Electro-hydraulic Flow Control Servo Valve；

■ Overall dimensions（mm）：

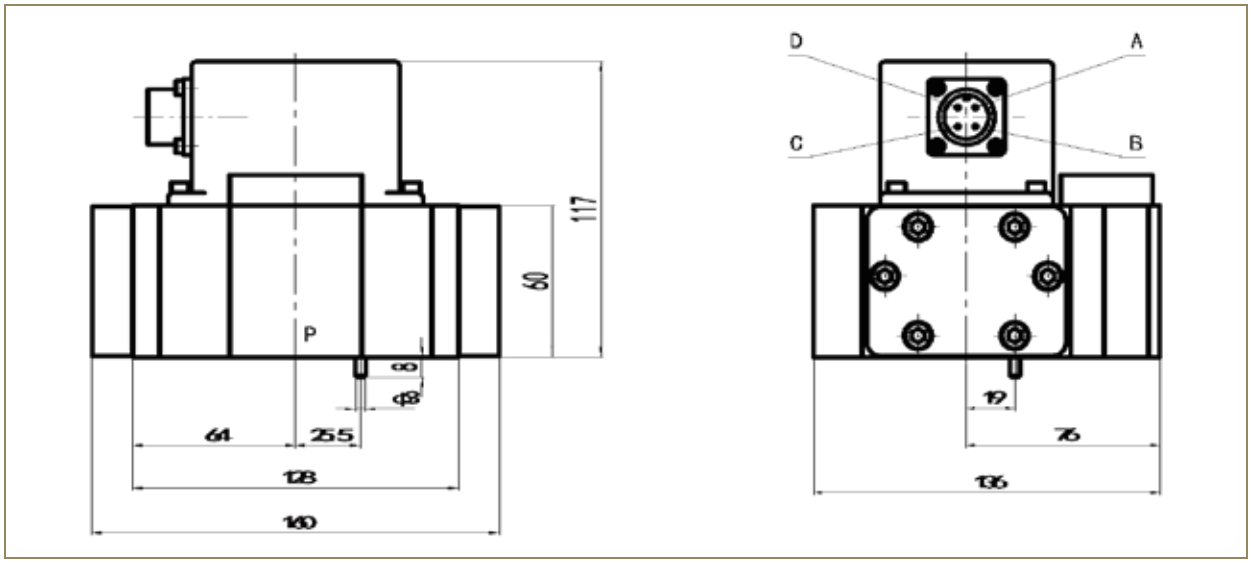

■ Installation dimensions（mm）：

□ Requirement: Flatness less than 0.01mm；roughness below 1.6；

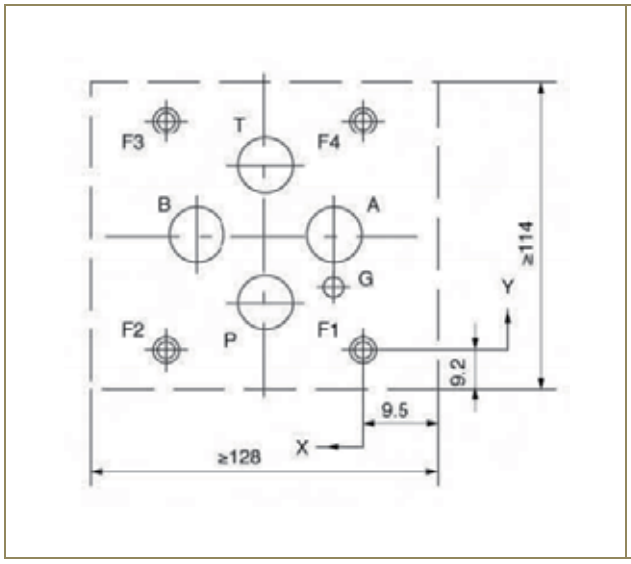

0	P	A	B	T	G	F1	F2	F3	F4
	Φ20	Φ20	Φ20	Φ20	Φ4	M10	M10	M10	M10
X	36.5	11.1	61.9	36.5	11.1	0	73	73	0
Y	17.4	42.8	42.8	68.2	23.7	0	0	85.6	85.6

■ SFL218 Series：

- ◻ Electro-hydraulic Flow Control Servo Valve；
- ◻ Rated flow Q_n（⊿P=7 MPa）：4,10,20,40,60 l/min

■ Performance indices：

Item		Unit	Index
Supply pressure P_s		MPa	2～31.5
Rated supply pressure P_n		MPa	21
Rated flow Q_n（⊿P=7 MPa）		l/min	4,10,20,40,60
Rated current I_n		mA	40
Hysteresis		%	≤4
Threshold		%	≤1
Nonlinearity		%	≤±7.5
Unsymmetry		%	≤±7.5
Pressure gain		%	＞30
Internal leakage		l/min	≤1,1.5,2,3,3
Null bias		%	≤±2
Null shift with temperature（⊿T=56℃）		%	≤±2
Null shift with supply pressure of（80～110%）P_n		%	≤±2
Null shift with return pressure of（0～20%）P_n		%	≤±2
Frequency response	Amplitude ratio with（-3dB）	Hz	≥80,50,40
	Phase lag with（-90°）	Hz	≥100,60,50
Working temperature		℃	-15～100
Weight		kg	≈0.8

■ Electrical interface：

Item	Unit	Single coil	Parallel coil	Series coil
Coil resistance	Ω	80	40	160
Rated current	mA	40	40	20
Coil inductance	H	0.72	0.36	1.44

■ SFL218 Series：

□ Electro-hydraulic Flow Control Servo Valve；

■ Overall dimensions（mm）：

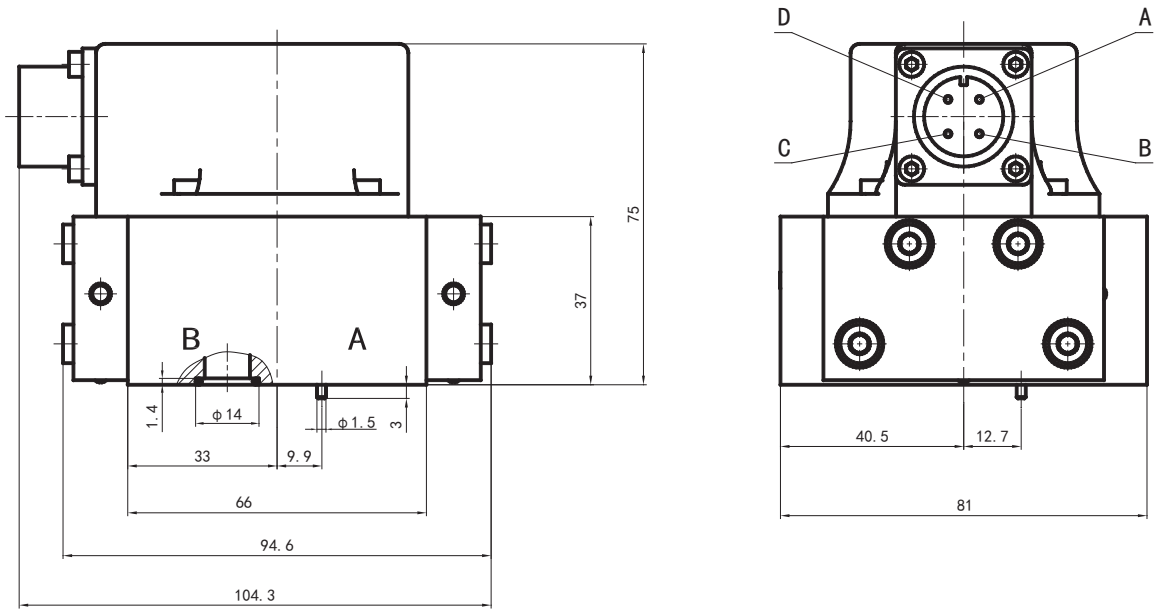

■ Installation dimensions（mm）：

□ Requirement: Flatness less than 0.01mm；roughness below 1.6；

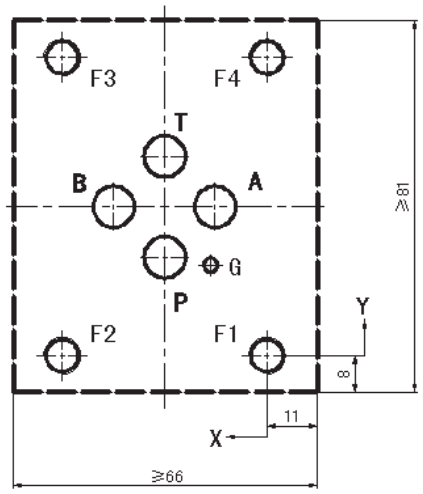

0	P	A	B	T	G	F1	F2	F3	F4
	Φ9	Φ9	Φ9	Φ9	Φ2	M8	M8	M8	M8
X	22.2	11.1	33.3	22.2	12.3	0	44.4	44.4	0
Y	21.4	32.5	32.5	43.6	19.8	0	0	65	65

■ SFL218A Series：

- ◻ Electro-hydraulic Flow Control Servo Valve；
- ◻ Rated flow Q_n（⊿P=7 MPa）：40 l/min

■ Performance indices：

Item		Unit	Index
Supply pressure P_s		MPa	2～31.5
Rated supply pressure P_n		MPa	21
Rated flow Q_n（⊿P=7 MPa）		l/min	40
Rated current I_n		mA	40
Hysteresis		%	≤3
Threshold		%	≤1
Nonlinearity		%	≤±10
Unsymmetry		%	≤±10
Pressure gain		%	＞30
Internal leakage		l/min	≤2
Null bias		%	≤±2
Null shift with temperature（⊿T=56℃）		%	≤±4
Null shift with supply pressure of（80～110%）P_n		%	≤±4
Null shift with return pressure of（0～20%）P_n		%	≤±4
Frequency response	Amplitude ratio with（-3dB）	Hz	≥50
	Phase lag with（-90°）	Hz	≥60
Working temperature		℃	-15～100
Weight		kg	≈2.8

■ Electrical interface：

Item	Unit	Single coil	Parallel coil	Series coil
Coil resistance	Ω	80	40	160
Rated current	mA	40	40	20
Coil inductance	H	0.72	0.36	1.44

■ SFL218A Series：

□ Electro-hydraulic Flow Control Servo Valve；

■ Overall dimensions（mm）：

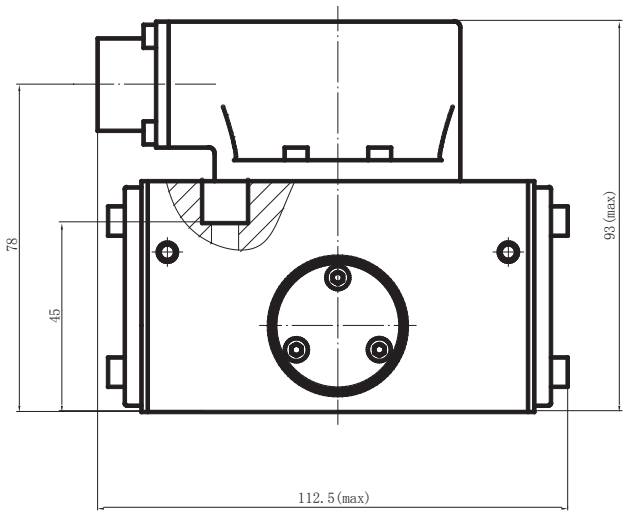

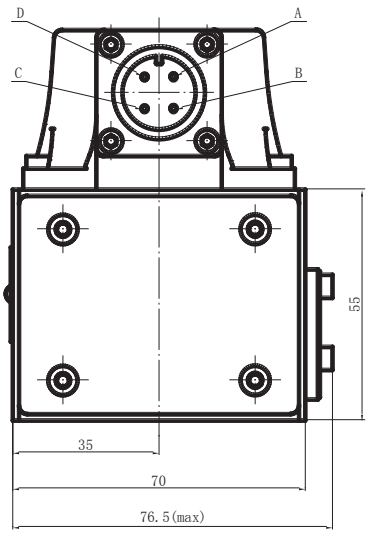

■ Installation dimensions（mm）：

□ Requirement: Flatness less than 0.01mm；roughness below 1.6；

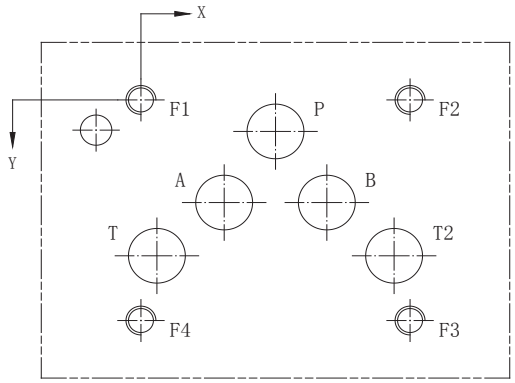

0	P	A	B	T	T2	X	F1	F2	F3	F4
	Φ11.5	Φ11.5	Φ11.5	Φ11.5	Φ11.5	Φ6.3	M6	M6	M6	M6
X	27.0	16.7	37.3	3.2	50.8	-9	0	54.0	54.0	0
Y	6.3	21.4	21.4	32.5	32.5	6.3	0	0	46.0	46.0

■ SFL218B Series：

- Electro-hydraulic Flow Control Servo Valve；
- Rated flow Q_n（⊿P=7 MPa）：40 l/min

■ Performance indices：

Item		Unit	Index
Supply pressure P_s		MPa	2～31.5
Rated supply pressure P_n		MPa	21
Rated flow Q_n（⊿P=7 MPa）		l/min	40
Rated current I_n		mA	40
Hysteresis		%	≤3
Threshold		%	≤1
Nonlinearity		%	≤±10
Unsymmetry		%	≤±10
Pressure gain		%	＞30
Internal leakage		l/min	≤2
Null bias		%	≤±2
Null shift with temperature（⊿T=56℃）		%	≤±4
Null shift with supply pressure of（80～110%）P_n		%	≤±4
Null shift with return pressure of（0～20%）P_n		%	≤±4
Frequency response	Amplitude ratio with（-3dB）	Hz	≥50
	Phase lag with（-90°）	Hz	≥60
Working temperature		℃	-15～100
Weight		kg	≈2.8

■ Electrical interface：

Item	Unit	Single coil	Parallel coil	Series coil
Coil resistance	Ω	80	40	160
Rated current	mA	40	40	20
Coil inductance	H	0.72	0.36	1.44

■ SFL218B Series：

□ Electro-hydraulic Flow Control Servo Valve；

■ Overall dimensions（mm）：

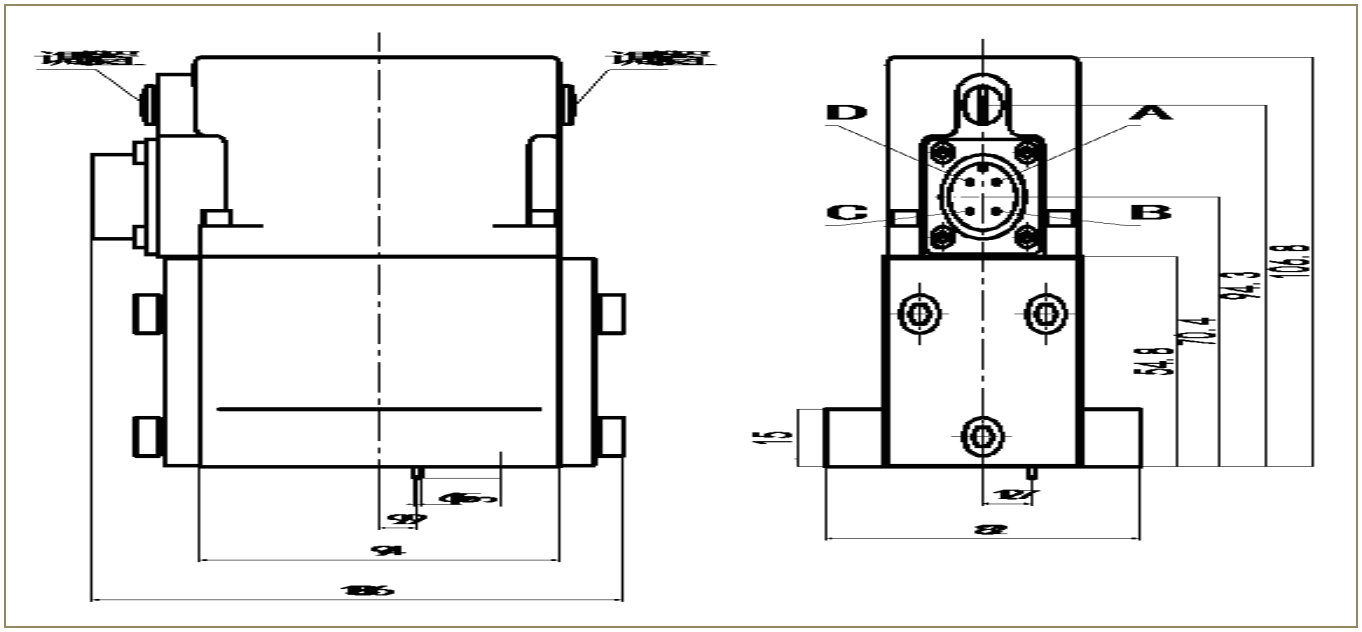

■ Installation dimensions（mm）：

□ Requirement: Flatness less than 0.01mm；roughness below 1.6；

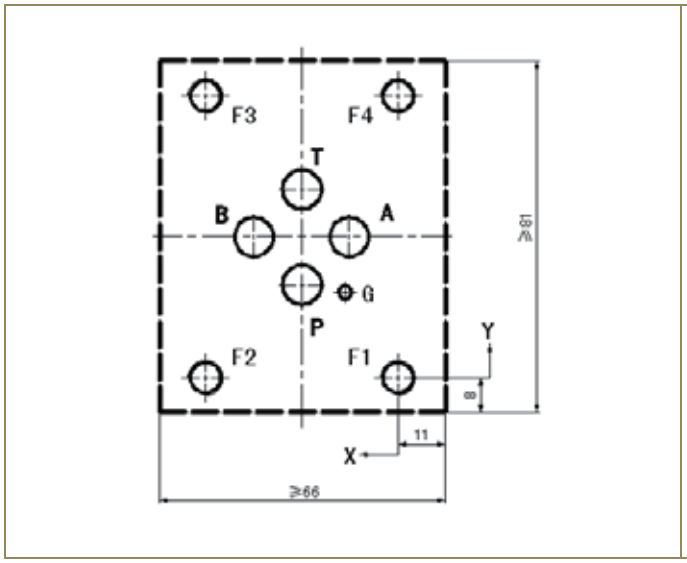

0	P	A	B	T	G	F1	F2	F3	F4
	Φ9	Φ9	Φ9	Φ9	Φ2	M8	M8	M8	M8
X	22.2	11.1	33.3	22.2	12.3	0	44.4	44.4	0
Y	21.4	32.5	32.5	43.6	19.8	0	0	65	65

■ SFL231 Series：

- Electro-hydraulic Flow Control Servo Valve；
- Rated flow Q_n（⊿P=7 MPa）：1;2;4;6;8 l/min

■ Performance indices：

Item		Unit	Index
Supply pressure P_s		MPa	2～28
Rated supply pressure P_n		MPa	21
Rated flow Q_n（⊿P=7 MPa）		l/min	1;2;4;6;8
Rated current I_n		mA	40
Hysteresis		%	≤4
Threshold		%	≤1
Nonlinearity		%	≤±10
Unsymmetry		%	≤±10
Pressure gain		%	＞30
Internal leakage		l/min	≤0.55;0.65;0.75;0.85
Null bias		%	≤±3
Null shift with temperature（⊿T=56℃）		%	≤±4
Null shift with supply pressure of（80～110%）P_n		%	≤±4
Null shift with return pressure of（0～20%）P_n		%	≤±4
Frequency response	Amplitude ratio with（-3dB）	Hz	≥60
	Phase lag with（-90°）	Hz	≥60
Working temperature		℃	-15～100
Weight		kg	≈2.8

■ Electrical interface：

Item	Unit	Single coil	Parallel coil	Series coil
Coil resistance	Ω	100	50	200
Rated current	mA	40	40	20
Coil inductance	H	1	0.5	2

■ SFL231 Series：

□ Electro-hydraulic Flow Control Servo Valve；

■ Overall dimensions（mm）：

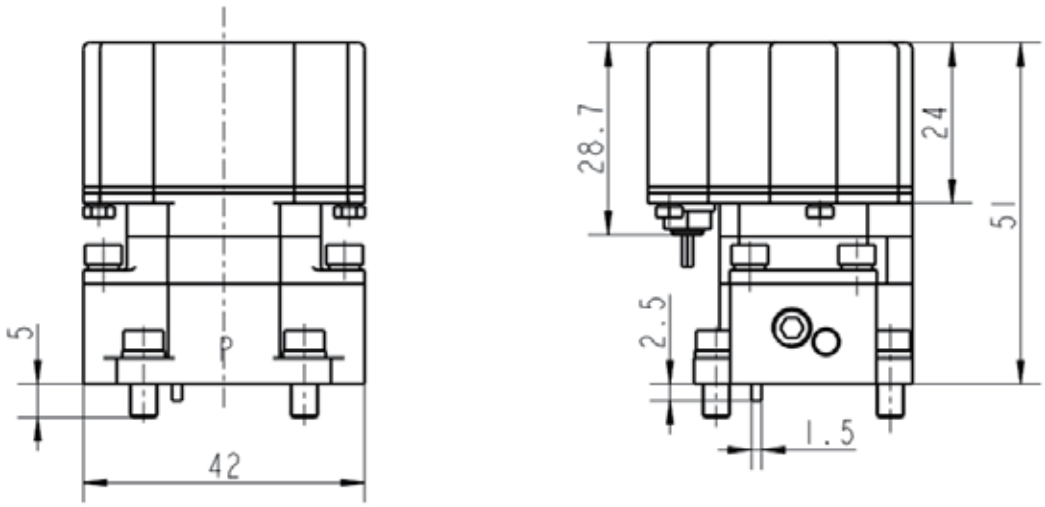

■ Installation dimensions（mm）：

□ Requirement: Flatness less than 0.01mm；roughness below 1.6；

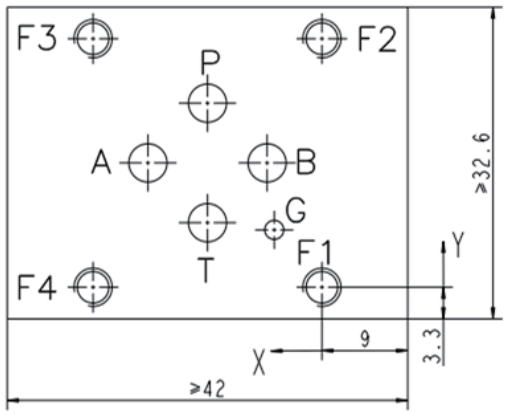

0	P	A	B	T	G	F1	F2	F3	F4
	Φ4	Φ4	Φ4	Φ4	Φ2	M4	M4	M4	M4
X	12	18.25	5.75	12	5	0	0	24	24
Y	19.25	13	13	6.75	6	0	26	26	0

■ SFL234 Series：

- ◻ Electro-hydraulic Flow Control Servo Valve；
- ◻ Rated flow Q_n（⊿P=7 MPa）：1;2;4;6;8 l/min

■ Performance indices：

Item		Unit	Index
Supply pressure P_s		MPa	2～35
Rated supply pressure P_n		MPa	21
Rated flow Q_n（⊿P=7 MPa）		l/min	40,120,160
Rated current I_n		mA	10
Hysteresis		%	≤0.4
Threshold		%	≤0.1
Internal leakage		l/min	≤4.7;5.4;5.4
Pilot leakage flow		l/min	≤2.6;2.6;2.6
Pilot flow		l/min	≤2.6;2.6;2.6
Null shift with temperature（⊿T=56˚C）		%	≤±2
Null shift with supply pressure of（80～110%）P_n		%	≤±2
Frequency response	Amplitude ratio with（-3dB）	Hz	≥95;75;75
	Phase lag with（-90°）	Hz	≥95;75;75
Working temperature		˚C	-15～100
Weight		kg	≈6.1

■ Electrical interface：

Pin	Definition
A	Power supply 24VDC
B	Power source, signal earth
C	Enabling signal, U_{C-B}＞+8.5 VDC
D-E	I_{D-E}=0～±10 mA
F-B	Valve core displacement feedback 4~20 mA
PE	Protective earthing

■ SFL234 Series：

□ Electro-hydraulic Flow Control Servo Valve；

■ Overall dimensions（mm）：

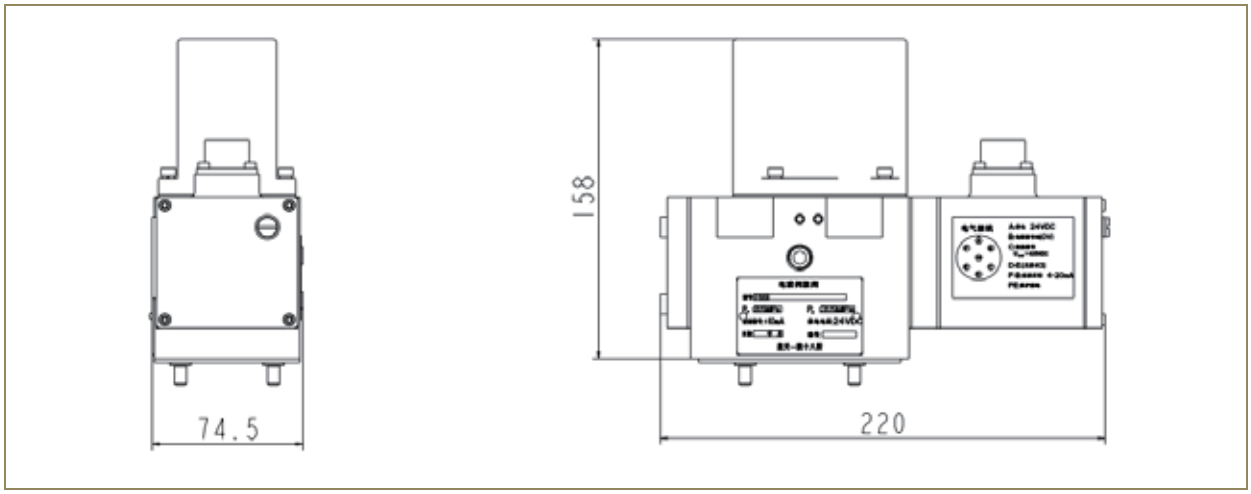

■ Installation dimensions（mm）：

□ Requirement: Flatness less than 0.01mm；roughness below 1.6；

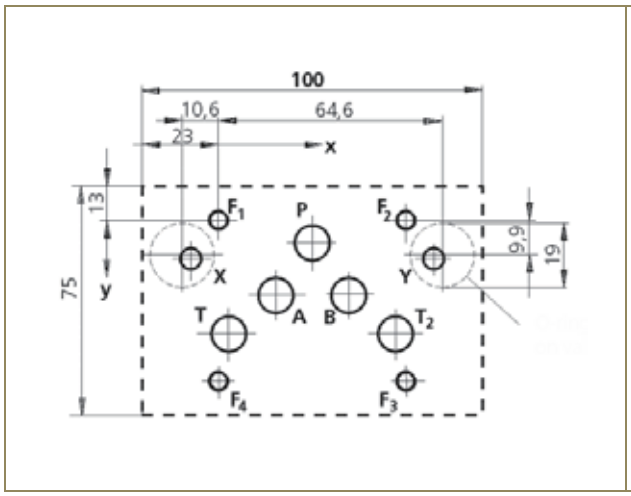

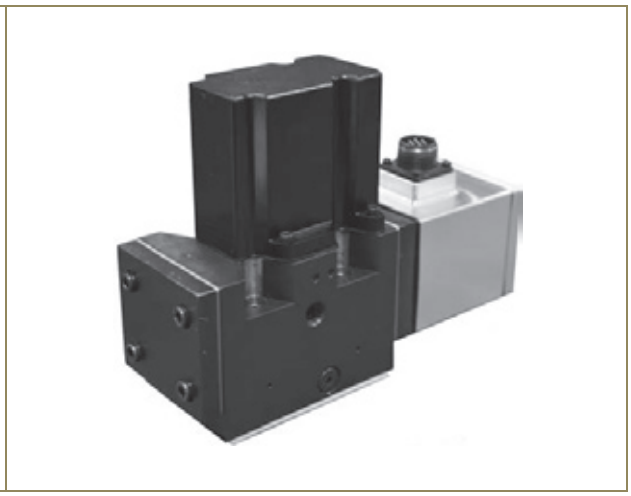

0	P	A	B	T	T2	X	Y	F1	F2	F3	F4
	Φ11.5	Φ11.5	Φ11.5	Φ11.5	Φ11.5	Φ6.3	Φ6.3	M6	M6	M6	M6
X	27.0	16.7	37.3	3.2	50.8	-14.7	64.6	0	54.0	54.0	0
Y	6.3	21.4	21.4	32.5	32.5	9	7.5	0	0	46.0	46.0

■ SFL316 Series：

- ☐ Three-stage Electro-hydraulic Flow Control Servo Valve；
- ☐ Rated flow Q_n（⊿P=7 MPa）：260 l/min

■ Performance indices：

Item		Unit	Index
Supply pressure P_s		MPa	2～31.5
Rated supply pressure P_n		MPa	21
Rated flow Q_n（⊿P=7 MPa）		l/min	260
Rated current I_n		mA	10
Hysteresis		%	≤1
Null bias		%	≤±2.5
Internal leakage		l/min	≤9.5
Nonlinearity		%	≤±1
Response time		ms	≤15
Frequency response	Amplitude ratio with（-3dB）	Hz	≥100
	Phase lag with（-90°）	Hz	≥100
Working temperature		℃	-15～100
Weight		kg	≈14

■ Electrical interface：

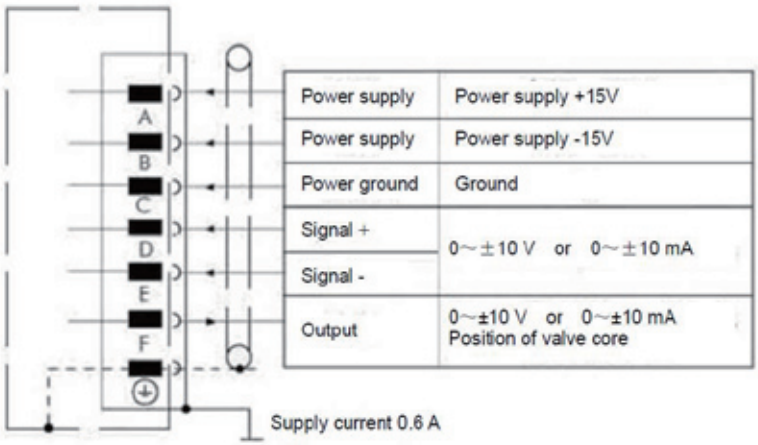

■ SFL316 Series：

□ Three-stage Electro-hydraulic Flow Control Servo Valve；

■ Overall dimensions（mm）：

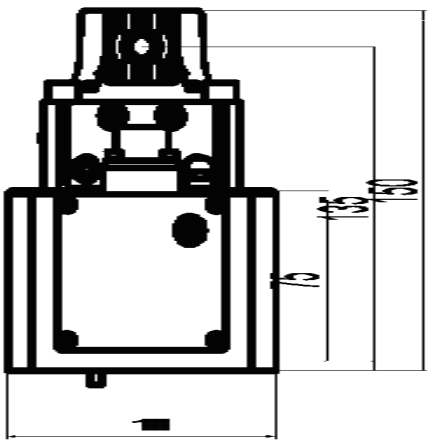

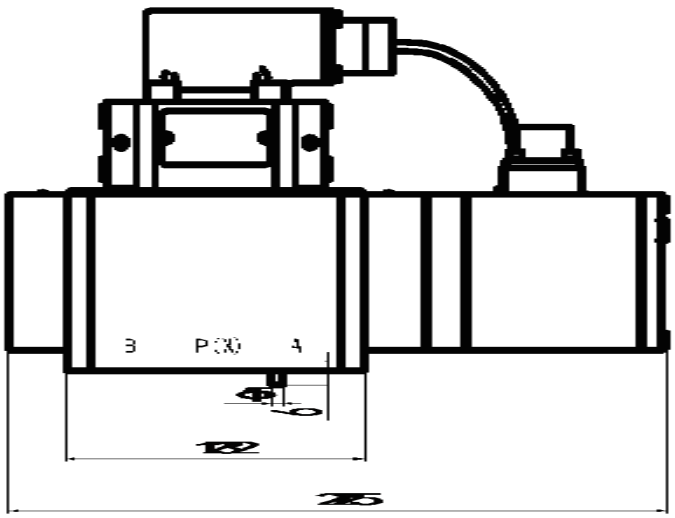

■ Installation dimensions（mm）：

□ Requirement: Flatness less than 0.01mm；roughness below 1.6；

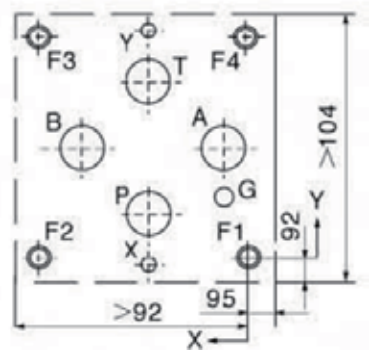

0	P	A	B	T	G	X	Y	F1	F2	F3	F4
	Φ16	Φ16	Φ16	Φ16	Φ8	Φ6	Φ6	M10	M10	M10	M10
X	36.5	11.1	61.9	36.5	11.1	36.5	36.5	0	73	73	0
Y	17.4	42.8	42.8	68.2	23.7	-2.6	88.2	0	0	85.6	85.6

■ SFL317 Series：

- ☐ Three-stage Electro-hydraulic Flow Control Servo Valve；
- ☐ Rated flow Q_n（⊿P=7 MPa）：750 l/min

■ Performance indices：

Item		Unit	Index
Supply pressure P_s		MPa	2～31.5
Rated supply pressure P_n		MPa	21
Rated flow Q_n（⊿P=7 MPa）		l/min	750
Rated current I_n		mA	10
Hysteresis		%	≤1
Null bias		%	≤±2.5
Internal leakage		l/min	≤9.5
Nonlinearity		%	≤±1
Response time		ms	≤15
Frequency response	Amplitude ratio with（-3dB）	Hz	≥100
	Phase lag with（-90°）	Hz	≥100
Working temperature		℃	-15～100
Weight		kg	≈14

■ Electrical interface：

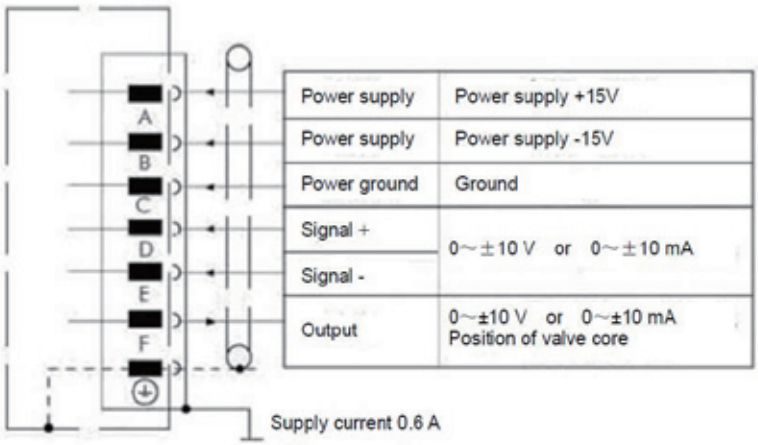

■ SFL317 Series：

□ Three-stage Electro-hydraulic Flow Control Servo Valve；

■ Overall dimensions（mm）：

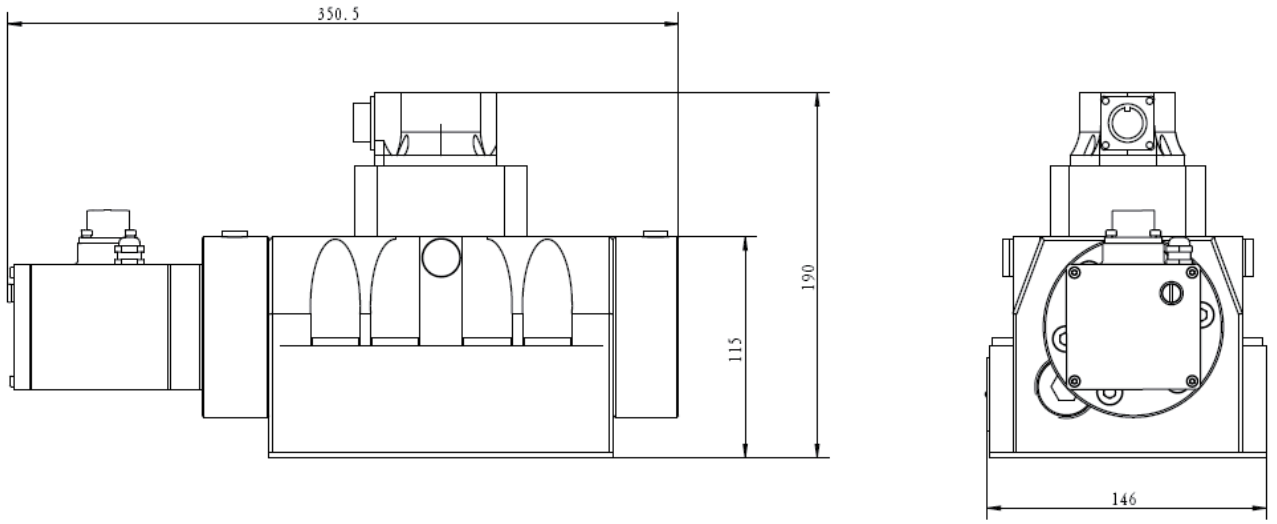

■ Installation dimensions（mm）：

□ Requirement: Flatness less than 0.01mm；roughness below 1.6；

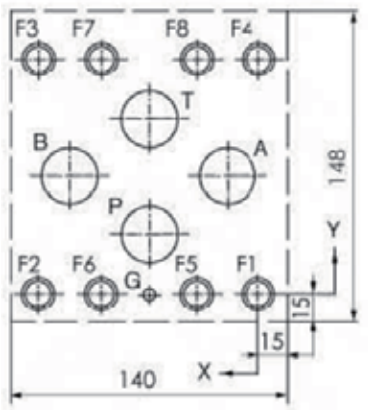

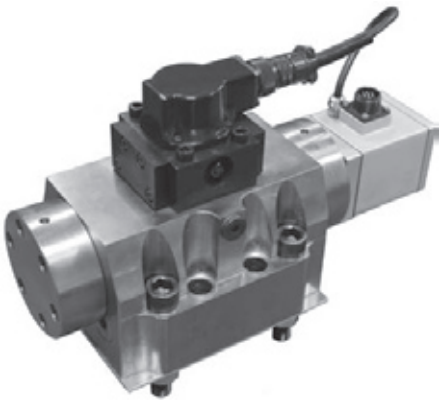

0	P	A	B	T	G	F1	F2	F3	F4	F5	F6	F7	F8
	Φ28	Φ28	Φ28	Φ28	Φ8	M16	M16	M16	M16	M16	M16	M16	M16
X	55.4	15.8	95	55.4	55.4	0	110.8	110.8	0	31.5	79.3	79.3	31.5
Y	30.1	58.7	58.7	87.3	0	0	0	117.4	117.4	0	0	117.4	117.4

■ SFZ141 Series：

- ◻ Direct Drive Electro-hydraulic Flow Control Servo Valve；
- ◻ Rated flow Q_n（⊿P=7 MPa）：20 l/min

■ Performance indices：

Item		Unit	Index
Supply pressure P_s		MPa	2～28
Rated supply pressure P_n		MPa	21
Rated flow Q_n（⊿P=7 MPa）		l/min	20
Rated current I_n		mA	10
Hysteresis		%	≤0.2
Threshold		%	≤0.3
Nonlinearity		%	≤±7.5
Unsymmetry		%	≤±7.5
Pressure GAIN		%	＞30
Internal leakage		l/min	≤1.5
Null bias		%	≤±1.5
Frequency response	Amplitude ratio with（-3dB）	Hz	≥30
	Phase lag with（-90°）	Hz	≥50
Working temperature		℃	-15～100
Weight		kg	≈1.2

■ Electrical interface：

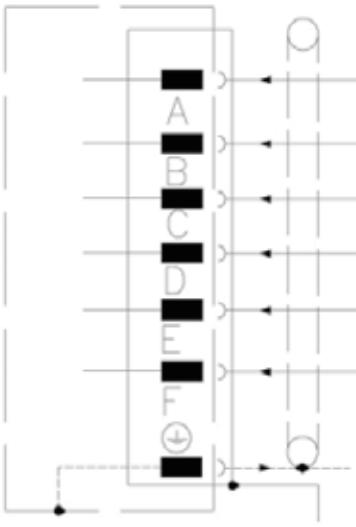

Power supply	24 VDC(18 VDC～32 VDC)
Power supply	⊥(0 V)
Null	
Signal +	0～±10 V or 0～±10 mA
Signal -	
Output	4-20 mA: position of valve core 12mA: valve core in the middle
PE	

■ SFZ141 Series：

□ Direct Drive Electro-hydraulic Flow Control Servo Valve；

■ Overall dimensions（mm）：

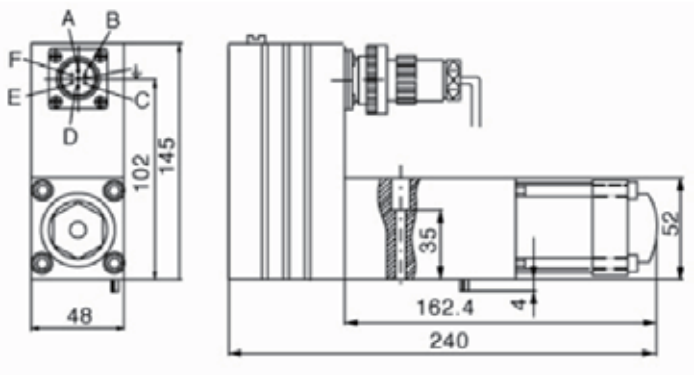

■ Installation dimensions（mm）：

□ Requirement: Flatness less than 0.01mm；roughness below 1.6；

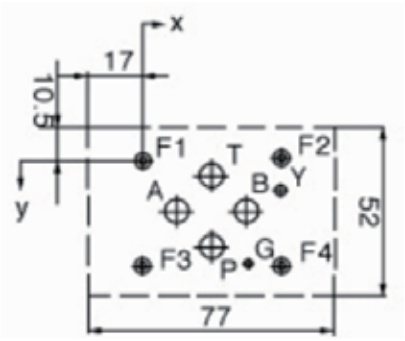

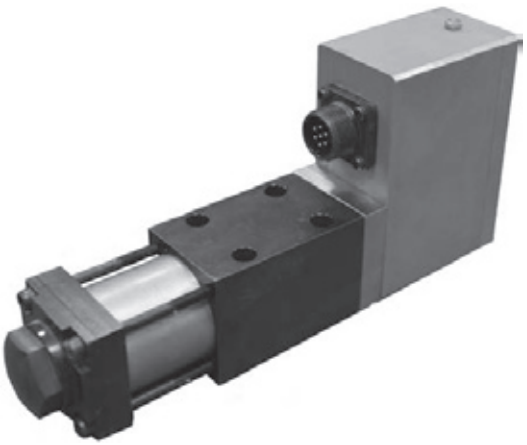

0	P	A	B	T	Y	F1	F2	F3	F4	G
	Φ7.5	Φ7.5	Φ7.5	Φ7.5	Φ3.5	M5	M5	M5	M5	Φ2
X	21.5	12.7	30.2	21.5	40.5	0	40.5	40.5	0	33
Y	25.9	15.5	15.5	5.1	9	0	-0.75	31.75	31	31.75

■ SFZ142 Series：

- ◻ Direct Drive Electro-hydraulic Flow Control Servo Valve；
- ◻ Rated flow Q_n（⊿P=7 MPa）：60 l/min

■ Performance indices：

Item		Unit	Index
Supply pressure P_s		MPa	2～28
Rated supply pressure P_n		MPa	21
Rated flow Q_n（⊿P=7 MPa）		l/min	60
Rated current I_n		mA	10
Hysteresis		%	≤0.2
Threshold		%	≤0.3
Nonlinearity		%	≤±7.5
Unsymmetry		%	≤±7.5
Pressure GAIN		%	＞30
Internal leakage		l/min	≤1.5
Null bias		%	≤±1.5
Frequency response	Amplitude ratio with（-3dB）	Hz	≥30
	Phase lag with（-90°）	Hz	≥50
Working temperature		℃	-15～100
Weight		kg	≈1.2

■ Electrical interface：

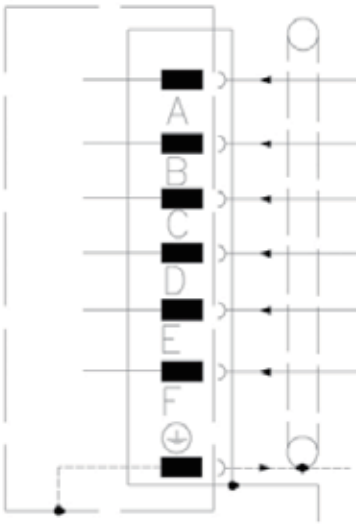

Power supply	24 VDC(18 VDC～32 VDC)
Power supply	⊥(0 V)
Null	
Signal +	0～±10 V or 0～±10 mA
Signal -	
Output	4-20 mA: position of valve core 12mA: valve core in the middle
PE	

■ SFZ141 Series：

□ Direct Drive Electro-hydraulic Flow Control Servo Valve；

■ Overall dimensions（mm）：

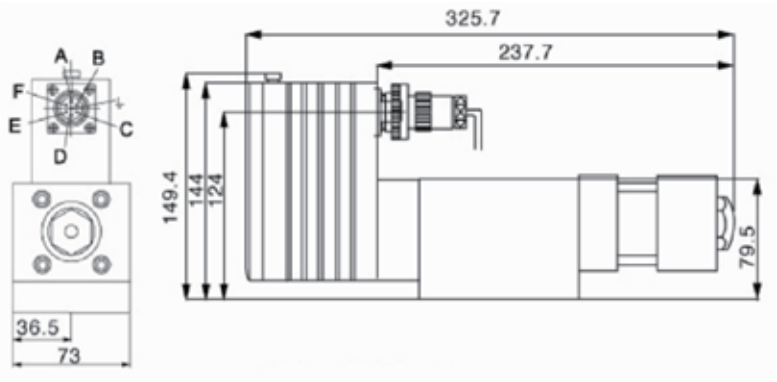

■ Installation dimensions（mm）：

□ Requirement: Flatness less than 0.01mm；roughness below 1.6；

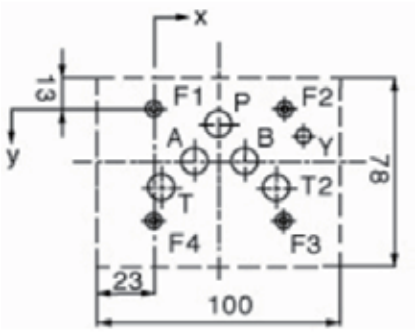

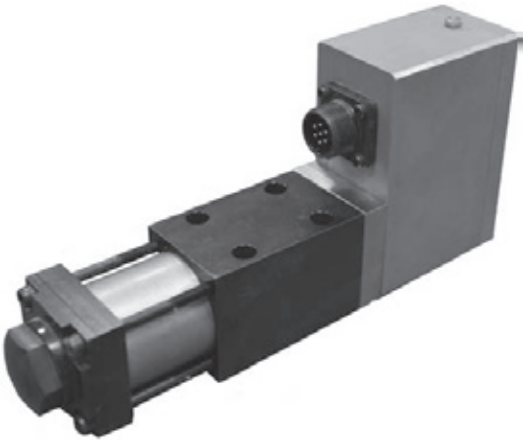

0	P	A	B	T	T2	Y	F1	F2	F3	F4
	Φ11	Φ11	Φ11	Φ11	Φ11	Φ6	M6	M6	M6	M6
X	27	16.7	37.3	3.2	50.8	62	0	54	54	0
Y	6.3	21.4	21.4	32.5	32.5	11	0	0	46	46

■ Performance Test System of Servo Valve：

- ☐ The performance test system of servo valve is composed of three parts, namely the pump station, test bench and control system, in accordance with GB/T15623-1995 Hydraulic Fluid Power-Servo Valves-Test Methods, QJ504A-1996 General Specifications for Electro-hydraulic Flow Control Servo Valves and QJ 2078A-1998 Test Methods for Electro-hydraulic Servo Valves.
- ☐ This system adopts PLC automatic control technology to realize the computer-aided data measurement, control and processing for servo valve testing. It is available for null setting, flushing, static test and dynamic test of various types of servo valve.

■ Test items：

Test items	Contents
Static test	No-load flow characteristics
	Threshold, overlap
	Pressure gain
	Internal leakage
	Supply pressure shift
	Return pressure shift
	Load flow
Dynamic pressure feedback test	Flow effect of Dynamic pressure feedback
	Differential pressure effect of Dynamic pressure feedback
Dynamic test	Frequency response
	Transient response

■ Test curve：

☐ No-load flow curve：

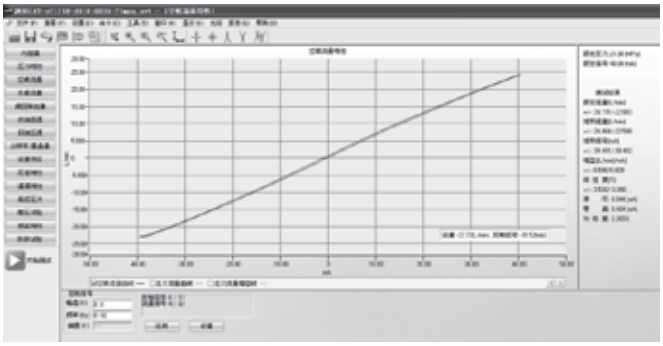

■ Test curve：

☐ Characteristic curve of internal leakage：

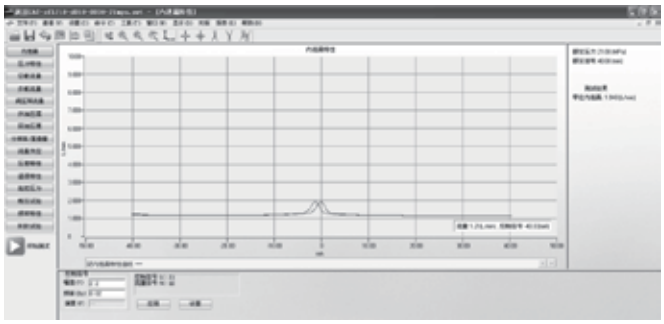

☐ Characteristic curve of pressure：

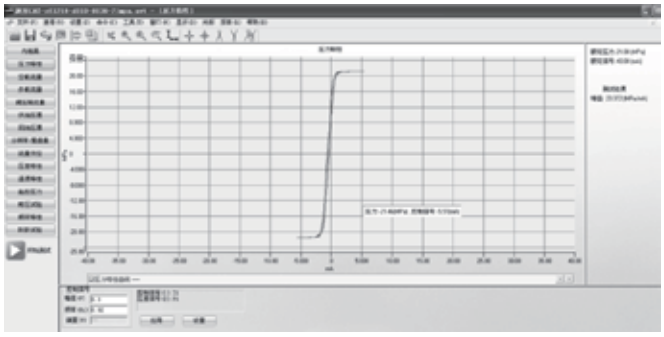

☐ Characteristic curve of frequency：

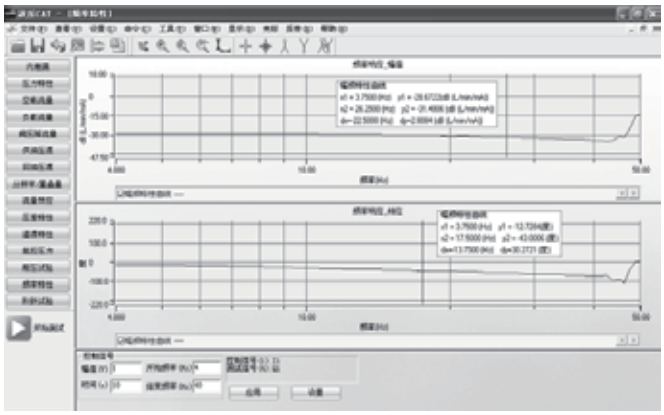

■ Servo Amplifier：

- ☐ he torque motor coil of servo valve is to be driven by servo amplifier with DC output that adopts deep current feedback to eliminate gain variation and phase lag caused by change of valve coil impedance.
- ☐ Our institute supplies the amplifiers dedicated to servo valves, and can offer special amplifiers as required by customers.

■ Performance indices：

Function \ Model	SA-1A	SA-2	DSA-1
Working power	220 VAC, 50Hz	±15VDC	24VDC
Inputs			
Command input	±10VDC, load impedance 50KΩ	±10VDC, load impedance 50KΩ	±10VDC, load impedance 50KΩ, or 4~20mA, load impedance 250Ω
Feedback input 1	±10VDC, load impedance 50KΩ	±10VDC, load impedance 50KΩ	±10VDC, load impedance, or 4~20mA, load impedance 250Ω
Feedback input 2	±10VDC, load impedance 100K	±10VDC, load impedance 100K	None
Output			
Current output	±200mA, load impedance 40Ω	±200mA, load impedance 40Ω	±100mA, load impedance 40Ω
Flutter	Amplitude: 0~5V Frequency: 250Hz±5%	Amplitude: 5V Frequency: 250Hz±5%	None
Converter			
Current conversion	4～20mA to ±10V output	4～20mA to ±10V output	None
Inverter	±10V, input impedance 50K	±10V, input impedance 50K	±10V, input impedance 20K
Wiring type	4-core socket: CX16Z4FGI 2-core socket: LX	Eurocard DIN 41612, with optional amplifier rack	Bolted terminal
Dimensions	320W×148H×345D	160W×100H×17D	100W×108H×25D
Weight	2450g	130g	90g
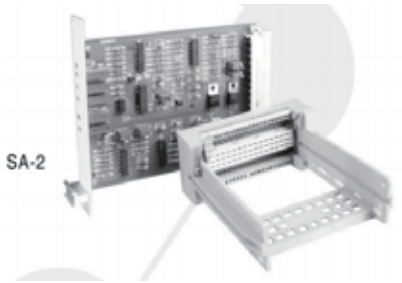
■ Amplifier photos：