Eaton PVH Variable Displacement Piston Pumps

Vickers® Product Line

57-141 cc^3
(3.5-8.6 in^3)

H-Series
Industrial Variable
Displacement

H-Series
Mobile Variable
Displacement

Powering Business Worldwide

Table of Contents

H Series Variable Displacement Piston Pumps

Introduction 3
Hydraulic System Design Calculations 4
Model Codes 5
Performance Data
- Rated Characteristics 7
- Performance Curves 8
- Response Data 13
- Sound Levels 13

Control Options
- Pressure Compensator 14
- Load Sensing and Pressure Compensator 14
- Pressure and Torque Limiter Control 15
- Pressure and Torque Limiting Plus Load Sensing 16
- Pressure Compensator without Load Sensing Option 17
- Remotely Controllable Pressure Compensator with Load Sensing Option 18

Input Shaft Selection Data 19
Input Shaft Dimensions 20
Installation Dimensions
- Basic Pumps (Non-thru-drive) 21
- Adjustable Maximum Volume Stop 25
- Thru-drive Pumps 26
- ISO Pump Mounting Flange 29
- Combination 2-Bolt/4-Bolt SAE Pump Mounting Flange 29
- Rear Cover for Thru-drive Pump 29
- Pumps for Shaft-up Operation 30
- Foot Mounting Kit 30

Application Data
- Hydraulic Fluids and Temperature Ranges 31
- Fluid Cleanliness 31
- Drive Data 31

Weights, Ordering 32
Installation and Start-up 32

Introduction

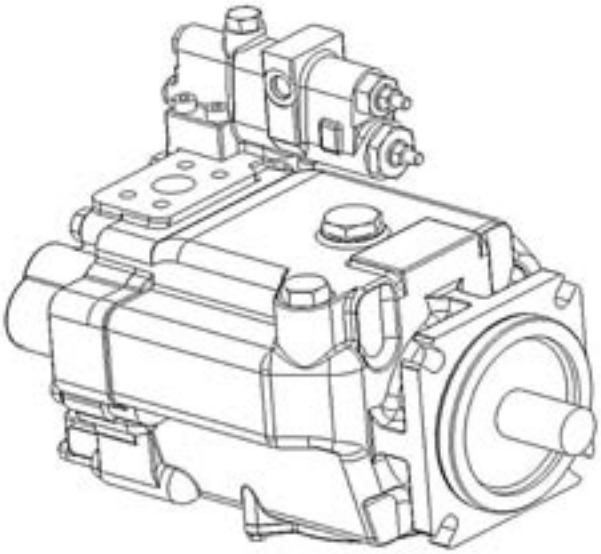

Eaton's Vickers® PVH high flow, high performance pumps are a family of variable displacement, inline piston units that incorporate the proven design, quality manufacturing techniques and operating features of other Vickers piston pumps, but in a smaller, lighter package.

The PVH series has been specially designed to meet the 250 bar (3625 psi) continuous duty performance requirements of new generation equipment designs.

These are efficient, reliable pumps, with a selection of optional controls for maximum operational flexibility. Designed specifically for strenuous application, they provide the productivity gains and controllability improvements desired in earthmoving, construction, machine tool, plastics, and all other energy-conscious markets. As with all Eaton products, these pumps have been fully laboratory tested and field proven.

PVH Series Benefits

- Versatile design includes single pumps, thru-drive arrangements, and a variety of drive shaft and control options that will adapt to any application and provide the most cost effective installation.
- Proven components designed into a heavy duty, compact housing to provide 250 bar (3625 psi) continuous operating performance, and 280 bar (4050 psi) operating performance in a load sensing system. This design assures long life at the higher performance levels required of today's power-dense machinery.
- Compact and lightweight design to reduce the application weight, and provide better access for installation and servicing.
- Service kits developed for the most critical rotating and control components to simplify and assure successful pump servicing.
- Quiet designs available for noise-sensitive industrial applications, reducing sound levels further to provide a more acceptable environment.
- Designed for maximum efficiency in any type of application. A variety of compensators provide the most effective system control, and the 95%-plus volumetric efficiency means more flow, and more input energy, is directed to the work and not into heat and waste.
- Heavy duty bearings and shafts result in minimum internal deflections and wear, providing for longer life and maximum uptime.

Hydraulic System Design Calculations

Basic Formulas

Output Flow (Q)

$$lpm = \frac{cm^3/r \times rpm}{1000} \qquad gpm = \frac{in^3/r \times rpm}{231}$$

Input Power (P)

$$kW = \frac{l/min \times bar}{600} \qquad hp = \frac{gpm \times psi}{1714}$$

Shaft Torque (M)

$$N\text{-}m = \frac{bar \times cm^3/r}{62.8} \qquad lb\text{-}in = \frac{psi \times in^3/r}{6.28}$$

Shaft Speed (n)

$$rpm = \frac{1000 \times 1/min}{cm^3/r} \qquad RPM = \frac{231 \times gpm}{in^3/r}$$

Output Power (P)

$$kW = \frac{N\text{-}m \times RPM}{9549} \qquad hp = \frac{lb\text{-}in \times rpm}{63{,}025}$$

Volumetric Displacement

$$cm^3/r = \frac{lpm \times 1000}{rpm} \qquad in^3/r = \frac{gpm \times 231}{rpm}$$

Basic Formulas

bar = 10 Newtons/cm^2
gpm = gallons per minute
hp = horsepower
lb-in = pound inch
lb-ft = pound feet
kW = kilowatt
kgf = kilograms force
l/min = liters per minute
N-m = Newton meters
psi = pounds per square inch
rpm = revolutions per minute

Efficiencies

$$\text{Volumetric } Nv = \frac{\text{gpm actual}}{\text{gpm theorectical}}$$

$$\text{Mechanical } Nm = \frac{\text{lb-in actual}}{\text{lb-in theorectical}}$$

Total Nt = Nv x Nm

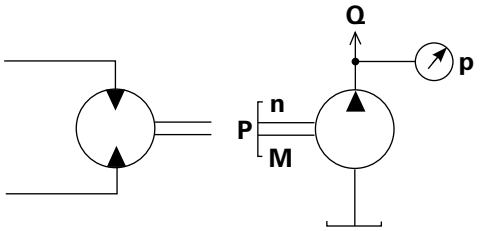

Commonly Used Conversions

To Convert	Into	Multiply by
bar	psi	14.5
cm^3	in^3	0.06102
˚C	˚F	(˚C x 1.8) +32
gallons (US)	liters	3.785
kg	lbs	2.205
kgf/cm^2	psi	14.2
kW	hp	1.341
liters	US Gallons	0.2642
mm	inches	0.03937
N-m	lb-in	8.85
N-m	lb-ft	0.7375
˚F	˚C	(˚F-32)/1.8
hp	kW	0.7457
inch	mm	2.54
in^3	cm^3	16.39
lb-in	N-m	0.113
lb-ft	N-m	1.356
lbs	kg	0.4535
psi	bar	0.06896
psi	kgf/cm^2	.070307

Note: Performance charts can be found on subsequent pages.

Model Codes
PVH Piston Pump

PVH	063	R	01	AB	1	0	B	23	14	00	00	1	00	1	00	00	0	A
1, 2 ,3	4, 5, 6	7	8, 9	10, 11	12	13	14	15, 16	17, 18	19, 20	21, 22	23	24, 25	26	27, 28	29, 30	31	32

1, 2, 3 **Pump Series**
PVH – PVH OC Piston Pump

4, 5, 6 **Displacement**
057 – 57.4 cm3/r [3.50 in3/r]
063 – 63.1 cm3/r [3.85 in3/r]
074 – 73.7 cm3/r [4.50 in3/r]
081 – 81.0 cm3/r [4.94 in3/r]
098 – 98.3 cm3/r [6.00 in3/r]
106 – 106.5 cm3/r [6.50 in3/r]
131 – 131.1 cm3/r [8.00 in3/r]
141 – 141.0 cm3/r [8.60 in3/r]

7 **Rotation**
R – Right-Hand Rotation (cw)
L – Left-Hand Rotation (ccw)

8, 9 **Front Mounting and Input Shaft**
01 – 4 Bolt C, 1-1/4 inch Dia. Keyed
02 – 4 Bolt C, 14T 12/24 DP Splined
03 – 4 Bolt C, 17T 12/24 DP Splined
04 – 4 Bolt C, 1-1/2 inch Tapered Shaft & Woodruff Keyway
05 – 4 Bolt C, 1-1/4 inch Dia. Tapered Keyed & 3/4-16 UNF-2A Ext Thread
08 – 2 Bolt B, 15T 16/32 DP Splined
0N – 4 Bolt M (ISO 125B4HW) with 32.1 (1.26) Dia Straight Keyed
10 – 4 Bolt C, 14T 12/24 DP Splined, 73.2 (2.88) Shaft Ext and 49.0 (1.93) Spline
13 – 4 Bolt C, 1-1/2 inch Dia Straight Keyed
16 – 4 Bolt C, 44.4 (1.75) Dia Straight Keyed
17 – 4 Bolt C, 1-1/4 in Dia Tapered Keyed & M20 x 1-1/2 in. Ext Thread
23 – 2 Bolt C, 17T 12/24 DP Splined Shaft
24 – 2 Bolt B 19T 24/48 DP Splined
30 – 4 Bolt C, 14T 12/24 DP Splined, 78.0 (3.07) Shaft Extension and 54.0 (2.12) Spline Length
51 – 2/4 Bolt C, 1-1/4 inch Dia Straight Keyed
52 – 2/4 Bolt C, 14T 12/24 DP Splined
53 – 2/4 Bolt C, 17T 12/24 DP Splined
58 – 2 Bolt B, 15T 16/32 DP Splined
60 – 2/4 Bolt C, 14T 12/24 DP Splined, 73.2 (2.88) Shaft Extension and 49.0 (1.93) Spline Length
62 – 2 Bolt C, 13T 8/16 DP Splined

10, 11 **Main Ports Size & Location**
AA – Side Ports; Suction 2 in. (Code 61) Pressure 1 in. (Code 61)
AB – Side Ports; Suction 2 in. (Code 61) - w/ M12 Threads; Pressure 1 in. (Code 61) - w/ M10 Threads
AC – Side Ports; Suction 2 in. (Code 61) - w/ M12 Threads; Pressure 1.25 in. (Code 61) - w/ M12 Threads
AD – Side Ports; Suction 2.5 in. (Code 61) w/ M12 Threads; Pressure 1 in. (Code 61) w/ M10 Threads
AE – Side Ports; Suction 2.5 (Code 61) w/ M12 Threads; Pressure 1.25 (Code 61) w/ M12 Threads
AF – Side Ports; Suction 2.5 in. (Code 61) ; Pressure - 1.25 in. (Code 62)
AG – Side Ports; Suction - 2.5 in. (Code 61) w/ M12 Threads; Pressure - 1.25 in. (Code 62) w/ M14 Threads
AH – Side Ports; Suction - 2.0 in. (Code 61) w/ M12 Threads; Pressure - 1.0 in. (Code 61) w/ M12 Threads
AJ – Side Ports; Suction 2.5 in. (Code 61); Pressure 1.0 in. (Code 61)
AL – Side Ports; Suction - 2.5 in. (Code 61); Pressure - 1.25 in. (Code 61)

12 **Drain Ports Size & Location**
1 – #8 SAE O-Ring Port - Bottom (Top Plugged)
2 – #8 SAE O-Ring Port - Top (Bottom Plugged)
3 – #10 SAE O-Ring Port - Bottom (Top Plugged)
4 – #10 O-Ring Port - Top (Bottom Plugged)
5 – #8 3/4-16 UNF-2B SAE O-Ring Port - Bottom (Top Plugged)
6 – #8 3/4-16 UNF-2B SAE O-Ring Port - Top (Bottom Plugged)
7 – #10 7/8-14 UNF-2B SAE O-Ring Port - Bottom (Top Plugged)
8 – #10 7/8-14 UNF-2B SAE O-Ring Port - Top (Bottom Plugged)
9 – #12 SAE O-Ring Port - Bottom (Top Plugged)
A – #12 SAE O-Ring Port - Top (Bottom Plugged)
B – M22 x 1.5 Metric O-Ring - Bottom (Top Plugged)
C – M22 X 1.5 Metric O-Ring - Top (Bottom Plugged)
F – Vertical Mount w/ G 1/2 BSPP - Bottom (Top Plugged)
G – Vertical Mount w/ G 1/2 BSPP - Top (Bottom Plugged)

13 **Diagnostic Pressure Ports**
0 – No Diagnostic Pressure Ports

14 **Controller Type***
A – Pressure Compensator
B – Pressure And Flow Compensator
D – Pressure Compensator w/ Torque Sensing
E – Pressure And Flow Compensator w/ Torque Sensing
G – IC Pressure Compensator
H – IC Pressure and Flow Compensator
J – IC Pressure and Flow Compensator w/ Torque Sensing
N – Pressure and Flow Compensator w/ Unload Valve

** Torque control is not available with case-to-inlet check value.*
Specify "AA" Pump Special Features

Model Codes
PVH Piston Pump

PVH	063	R	01	AB	1	0	B	23	14	00	00	1	00	1	00	00	0	A
1, 2 ,3	4, 5, 6	7	8, 9	10, 11	12	13	14	15,16	17,18	19,20	21,22	23	24,25	26	27,28	29,30	31	32

15,16 Pressure Comp. Setting
07 – 66-74 bar [957-1073 psi]
23 – 226-234 bar [3278-3394 psi]
25 – 246-254 bar [3568-3684 psi]
Other Settings Available by Request

17,18 Flow Compensator Setting
00 – No Flow Comp. Setting
14 – 13-15 bar [189-218 psi]
24 – 23-25 bar [334-363 psi]
AA – Unload Valve Standby 39-41 bar [334-363 psi]
Other Settings Available by Request

19,20 Torque Setting/ Other Comp.
00 – None
04 – 36-44 bar [522-638 psi]
14 – 136-144 bar [1973-2089 psi]
AA – Unload Valve 186.2-193 bar [2700-2800 psi] Reset 157.8-164.6 bar [2288-2387 psi]
AB – Unload Valve 203.4-210.2 bar [2950-3050 psi] Reset 183-190 bar [2650-2748 psi]

21,22 Control Special Features
AB –** No Control Special Features
AA – Bleed Down Orifice 0.37 [.015] Ø
AR – Bleed Down Orifice 0.65 [.026] Ø
AV – 1.60 [.063] Ø Orifice (IC Control Only)
AW – 0.76 [.030] Ø Orifice (IC Control Only)

23 Maximum Displacement Option
1 – Standard Displacement (As given in code title)
2 – Adjustable Max Displacement (Set at Max)
F – Adjustable Max Displacement (Set at Max) w/ Extended Adjusting Screw
Other Settings Available by Request.

24,25 Auxiliary (Rear) Mount and Output Shaft
00 – No Auxiliary Mounting Features
AA – 2/4 Bolt C, 14T 12/24DP
AB – 2/4 Bolt B, 15T 16/32DP
AC – 2 Bolt A, 9T
AY – 2/4 Bolt B, 13T 16/32DP
AZ – 2/4 Bolt C, 17T 12/24DP
BA – 2 Bolt A, 11T 16/32DP

26 Shaft Seal
1 – Single, OneWay Shaft Seal, Viton®
3 – Single, OneWay Shaft Seal, Nitrile
5 – Double, TwoWay Shaft Seal, Viton® W/ VHO Filter
6 – Double, TwoWay Shaft Seal, Nitrile W/ VHO Filter

27,28 Pump Special Features
00 – No Pump Special Features
AA – No Case To Inlet Check
AE – Q250 Valve Plate, No Case To Inlet Check Valve
AF – Q140 Valve Plate, No Case To Inlet Check Valve
AP – Pressure Lube Swashplate
AR – Pressure Lube Swashplate, No Case To Inlet Check Valve
SC – Q250 Valve Plate, Grooved Saddle Bearings, No Case To Inlet Check Valve
BH – Q250 Valve Plate, Pressure Lube Swashplate
BM – Q250 Valve Plate, Pressure Lube Swashplate, No Case To Inlet Check Valve
BR – Q140 Valve Plate, Grooved Saddle Bearings, No Case To Inlet Check Valve

29,30 Paint
00 – No Paint
01 – Blue Primer

31 Identification
0 – Standard

32 Design Code
A – First Design

Performance Data

Performance data is typical with SAE 10W anti-wear hydraulic oil at 50°C (120°F) and at zero pump inlet pressure, except where otherwise indicated.

Rated Characteristics of PVH Industrial Pumps*

Parameters	PVH057	PVH063	PVH074	PVH081	PVH098	PVH106	PVH131	PVH141
Geometric displacement, max. cm^3/r	57,4	63,1	73,7	81,0	98,3	106,5	131,1	141,1
(in^3/r)	(3.5)	(3.85)	(4.5)	(4.94)	(6.0)	(6.50)	(8.0)	(8.60)
Rated pressure bar (psi)	250 (3625)†	230 (3300)†	250 (3625)†	230 (3300)†	250 (3625)†	230 (3300)†	250 (3625)†	230 (3300)†
Rated speeds in r/min at various inlet pressures								
127 mm Hg (5" Hg)	1500	1500	1500	1500	1500	1500	1200	1200
Zero inlet pressure	1800	1800	1800	1800	1800	1800	1500	1500
0,48 bar (7 psi)	1800	1800	1800	1800	1800	1800	1800	1800
Typical effective flow in l/min (USgpm) Rated Pressure								
at 1500 r/min 83	102		140		186			
	(22)		(27)		(37)		(49)	
at 1800 r/min	98		125		170		223	
	(26)		(33)		(45)		(59)	

† In load sensing systems the compensator can be set at 280 bar (4060 psi).
* Industrial Valve Plates are specified in Pump Special Feature 'Q250' or 'Q140'

Ratings of PVH Industrial Pumps with Alternate Fluids

Parameters	Petroleum based	Polyol ester	Water glycol	HWBF(90–10) thickened
Max. pressure bar (psi)	250 (3625)	230 (3300)	172 (2500)	155 (2250)
Max. speed in r/min at:				
1,0 bar abs. (0 psi)	1800 ‡	1800	1800	1700
0,85 bar abs. (5" Hg)	1500 □	1500	1500	1500
Max. inlet temp. deg. C (deg. F)	93 (200)	65 (150)	50 (120)	50 (120)

‡ 1500 rpm for PVH131/141 only. □ 1200 rpm for PVH131/141 only.

Rated Characteristics of PVH Mobile Pumps ◊

Parameters	PVH057	PVH063	PVH074	PVH081	PVH098	PVH106	PVH131	PVH141
Rated speeds in r/min at various inlet pressures								
127 mm Hg (5" Hg)	2000	2000	1850	1850	1750	1750	1650	1500
Zero inlet pressure	2400	2400	2200	2200	2100	2100	2000	2000
0,48 bar (7 psi)	3000	3000	2750	2750	2600	2600	2500	2500
Typical effective flow in l/min (USgpm) at 250 bar (3625 psi)								
and rated speed @	134	146	156	172	202	216	249	272
zero inlet pressure	(35)	(38)	(41)	(45)	(53)	(57)	(66)	(72)

◊ Displacements & rated pressure are same as for PVH*** industrial pumps.

Performance Data

PVH057

Delivery and efficiency versus outlet pressure at 1800 r/min

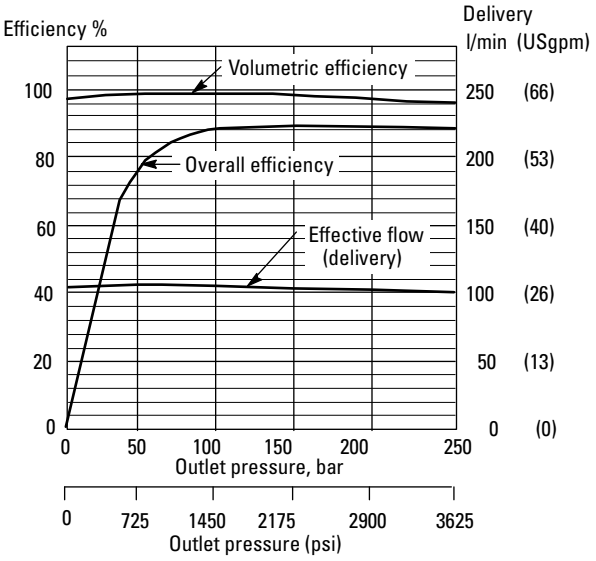

Input torque and power versus outlet pressure at 1800 r/min

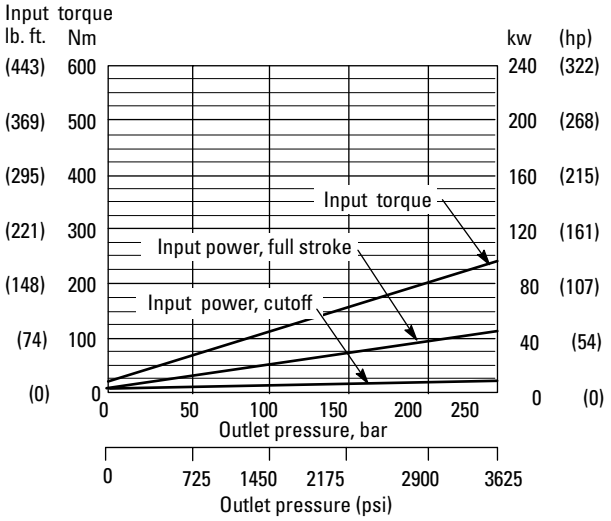

Input power versus speed

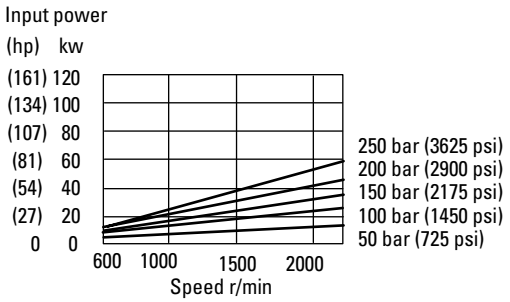

PVH063

Delivery and efficiency versus outlet pressure at 1800 r/min

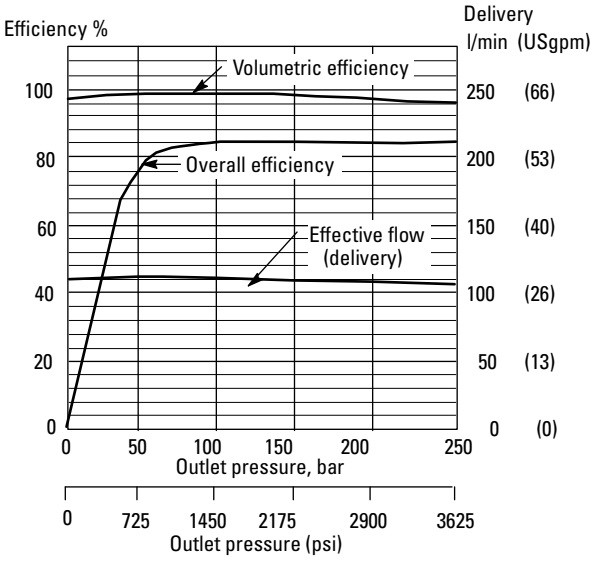

Input torque and power versus outlet pressure at 1800 r/min

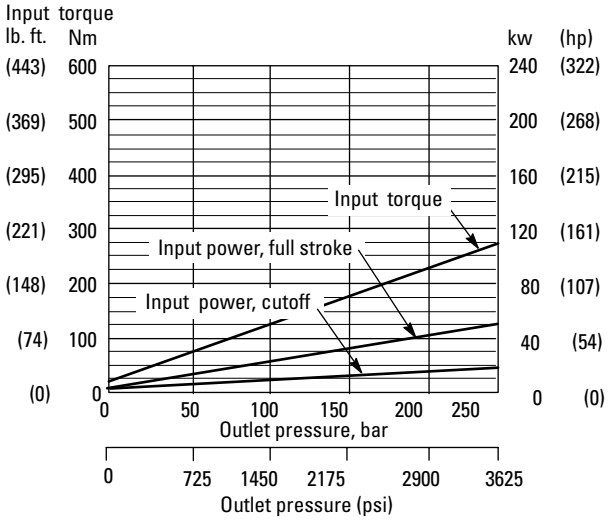

Input power versus speed

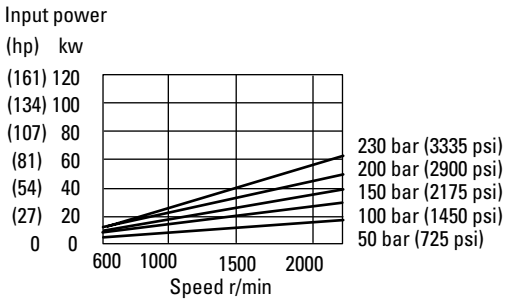

Performance Data

PVH074

Delivery and efficiency versus outlet pressure at 1800 r/min

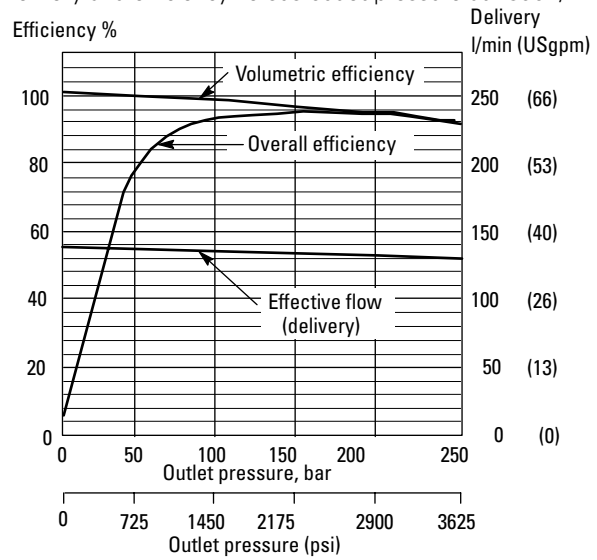

Input torque and power versus outlet pressure at 1800 r/min

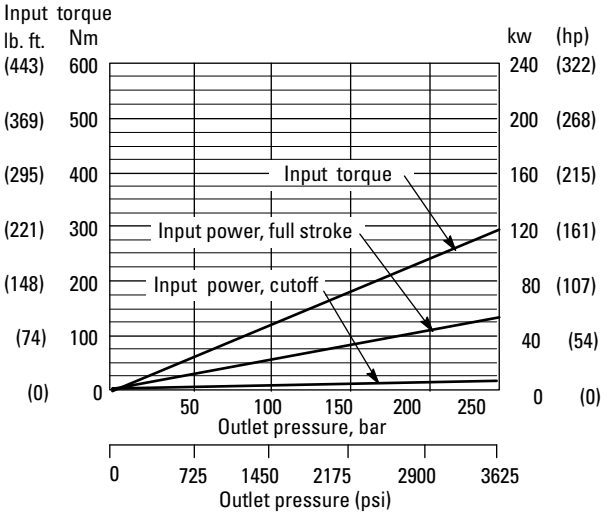

Input power versus speed

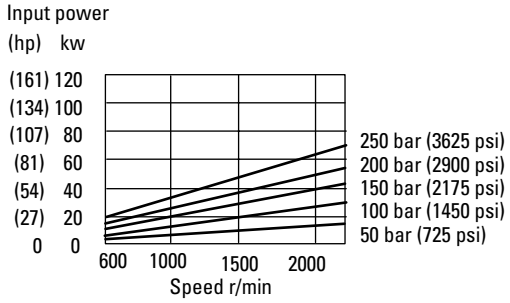

PVH081

Delivery and efficiency versus outlet pressure at 1800 r/min

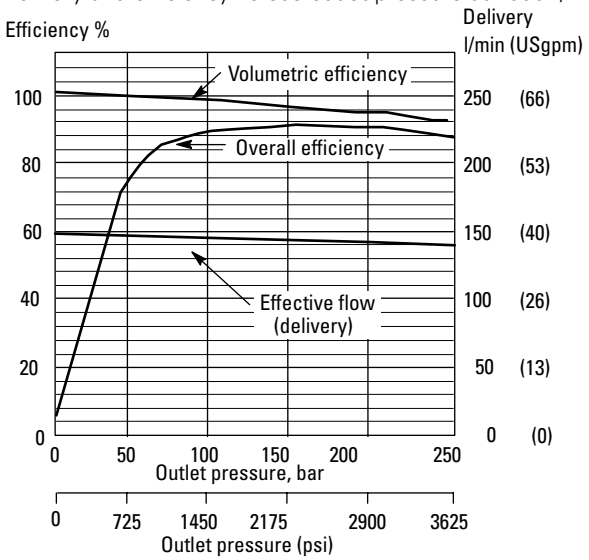

Input torque and power versus outlet pressure at 1800 r/min

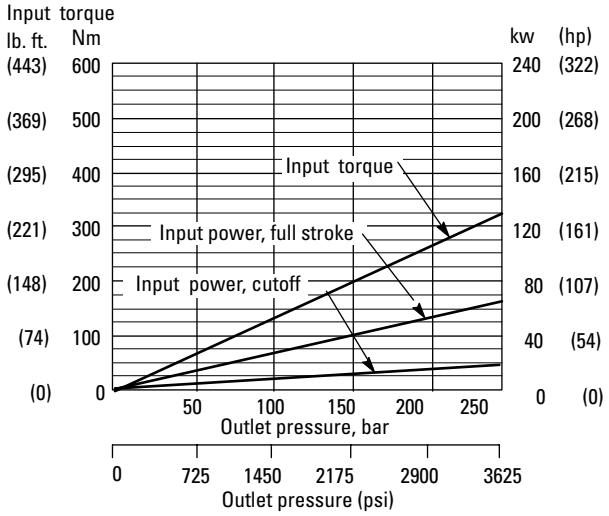

Input power versus speed

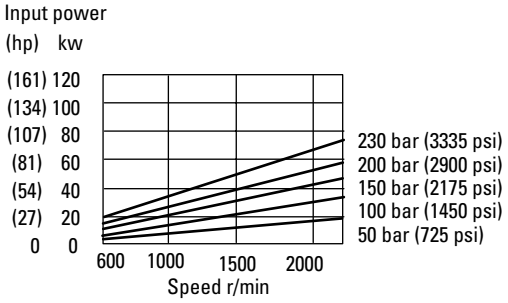

Performance Data

PVH098

Delivery and efficiency versus outlet pressure at 1800 r/min

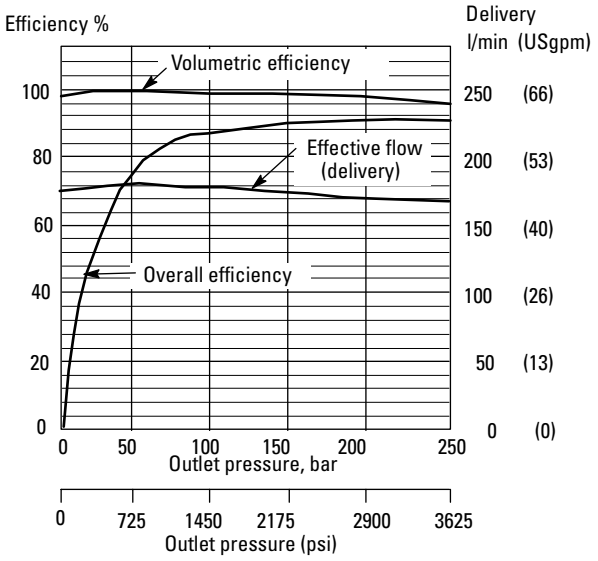

Input torque and power versus outlet pressure at 1800 r/min

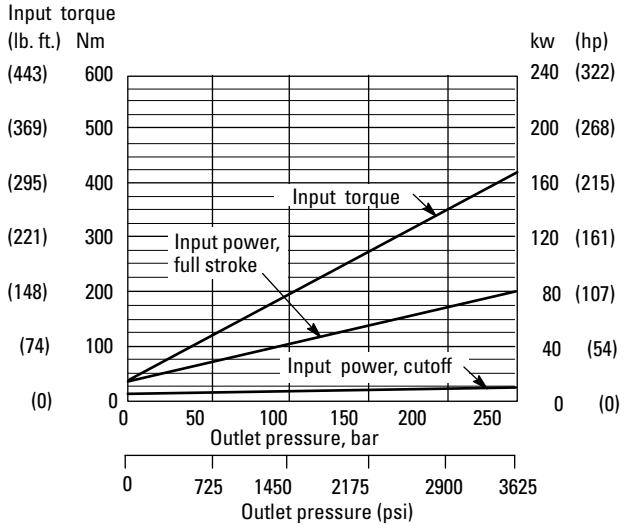

Input power versus speed

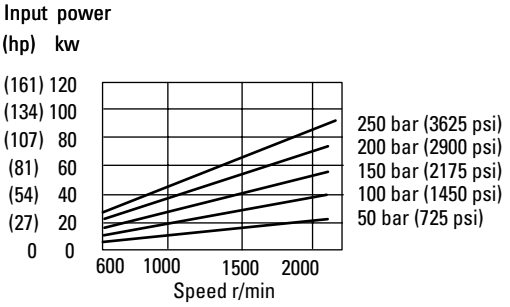

PVH106

Delivery and efficiency versus outlet pressure at 1800 r/min

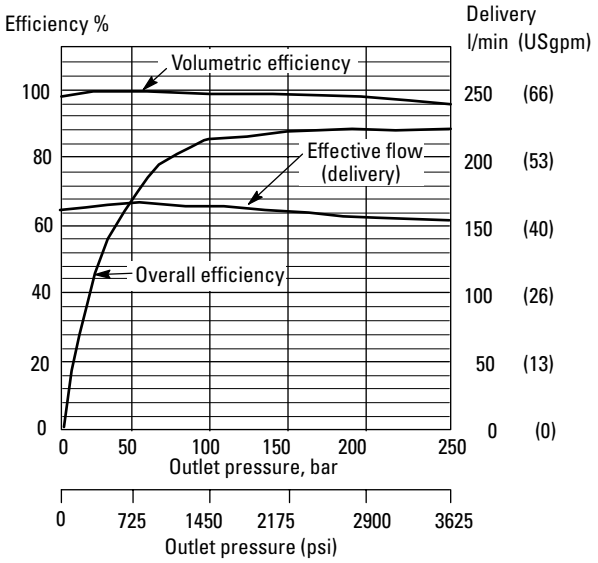

Input torque and power versus outlet pressure at 1800 r/min

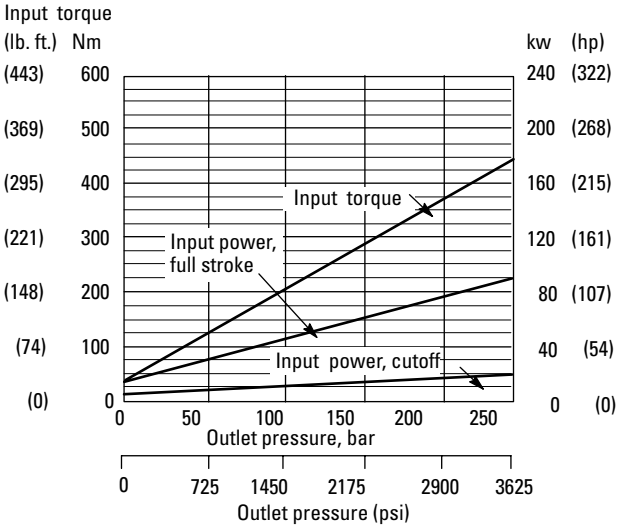

Input power versus speed

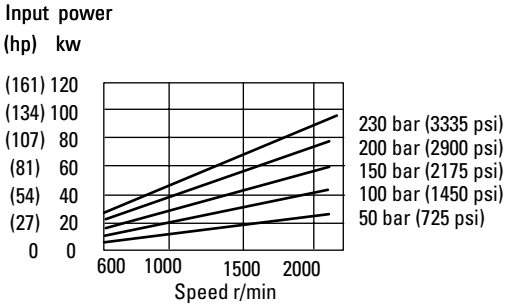

Performance Data

PVH131

Delivery and efficiency versus outlet pressure at 1800 r/min

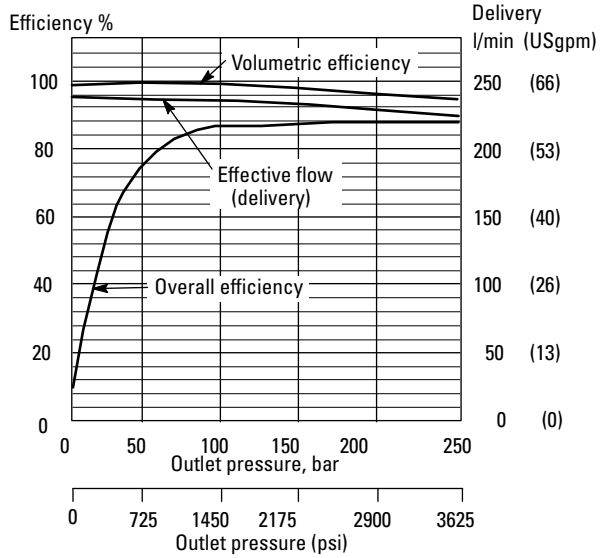

Input torque and power versus outlet pressure at 1800 r/min

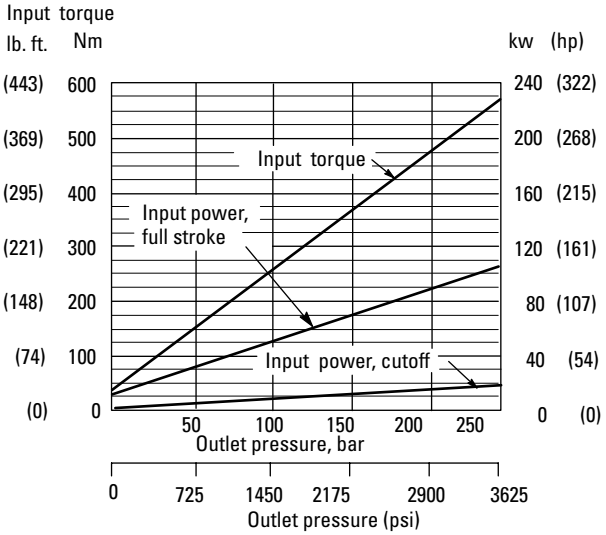

Input power versus speed

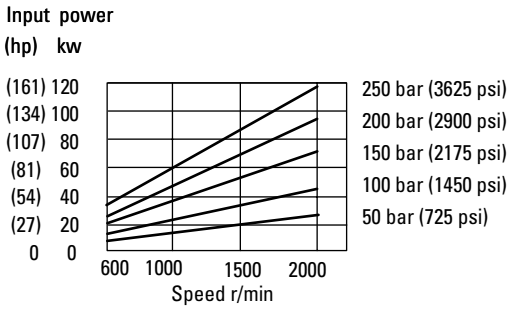

PVH141

Delivery and efficiency versus outlet pressure at 1800 r/min

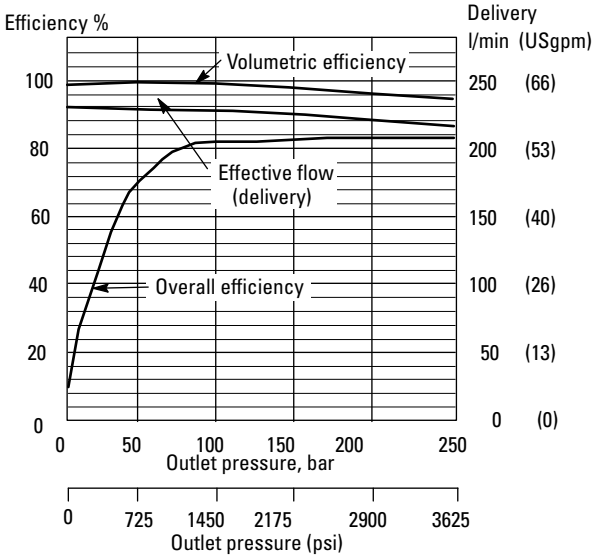

Input torque and power versus outlet pressure at 1800 r/min

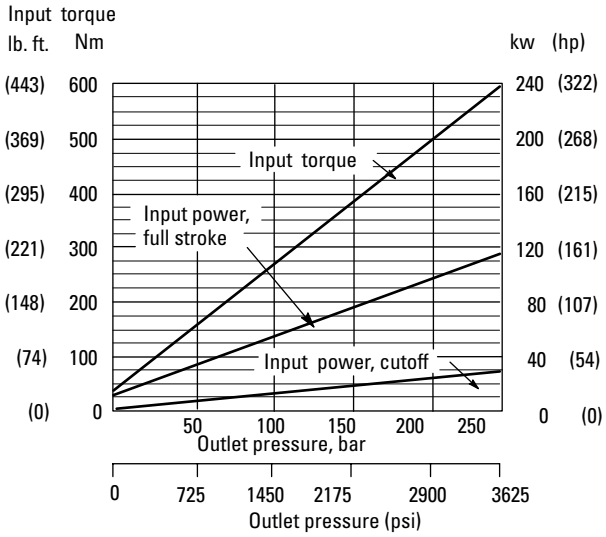

Input power versus speed

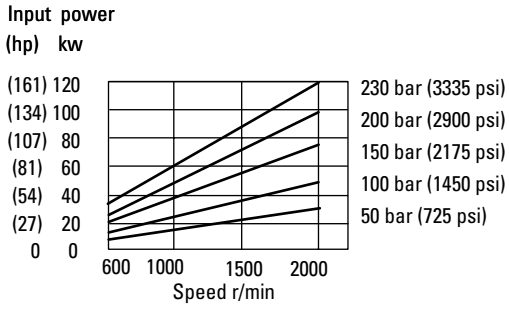

Performance Data

Performance data is typical with SAE 10W anti-wear hydraulic oil at 50°C (120°F) and at zero pump inlet pressure, except where otherwise indicated.

Rated Speed at Reduced Displacement and Zero Inlet Pressure

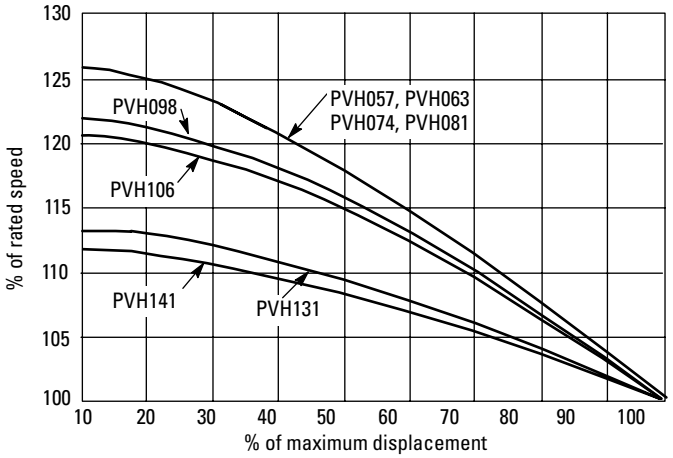

Note: Speeds at 10% displacement represent maximums at load-sense standby condition. These speeds must be reduced to rated speeds at 100% displacement before leaving standby condition, or pump damage may result.

Effective Flow at Maximum Torque

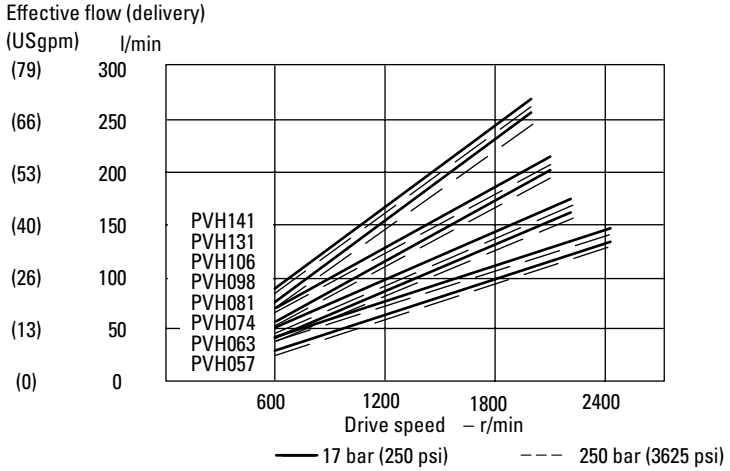

Inlet Pressure/Vacuum versus Speed, Mobile Pumps

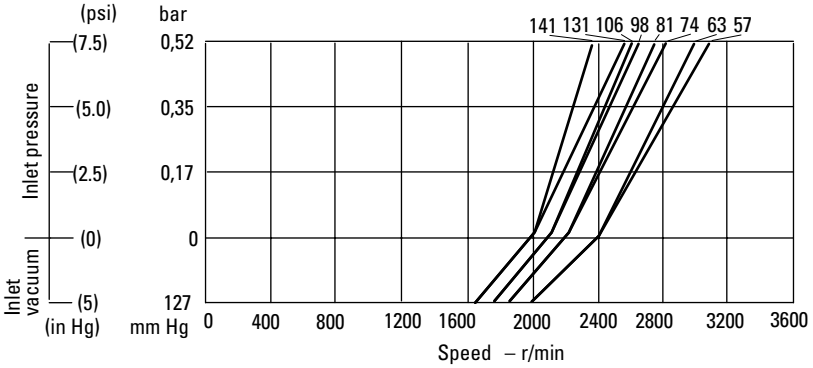

Performance Data

Response Data

Model series/ Control type	Typical yoke response † On stroke	Off stroke
PVH057/A**	.101 sec.	.015 sec.
PVH057/B**	.080 sec.	.014 sec
PVH063	.101 sec.	.015 sec.
PVH063	.080 sec.	.014 sec
PVH074/A**	.097 sec.	.015 sec.
PVH074/B**	.088 sec.	.028 sec.
PVH081	.097 sec.	.015 sec.
PVH081	.088 sec.	.028 sec.
PVH098/A**	.134 sec.	.019 sec.
PVH098/B**	.118 sec.	.029 sec.
PVH106	.134 sec.	.019 sec.
PVH106	.118 sec.	.029 sec.
PVH131/A**	.139 sec.	.019 sec.
PVH131/B**	.118 sec.	.029 sec.
PVH141	.139 sec.	.019 sec.
PVH141	.118 sec.	.029 sec.

† Based on 6900 bar/sec (100,000 psi/sec) pressure rise at rated speed and pressure.

Sound Levels

Vickers PVH pumps are designed to provide the highest levels of system performance with noise levels within OSHA requirements. The standard models exhibit low sound levels across a wide range of operating speeds and pressures to accommodate the conditions necessary for high performance mobile vehicles. In addition, the quieter QI models provide even lower sound levels at typical in-plant conditions.

Sound is generated by a variety of factors associated with the system, machine, and environment. For more information concerning the causes and nature of noise in machinery, and methods to reduce sound levels, refer to Eaton's "More Sound Advice" bulletin 390 and "Noise Control in Hydraulic Systems" bulletin 510.

Mobile Version – Sound Level dB(a) DIN (NFPA) ‡

Pressure bar (psi)	PVH057		PVH063		PVH074		PVH081		PVH098		PVH106		PVH131		PVH141	
	1200 r/min	1800 r/min	1800 r/min	2300 r/min	1200 r/min	1800 r/min	1800 r/min	2100 r/min	1200 r/min	1800 r/min	1800 r/min	2000 r/min	1200 r/min	1800 r/min	1800 r/min	1900 r/min
70 (1015)	71	76	77	78	71	76	74	74	71	75	80	80	76	82	81	84
140 (2030)	76	76	77	80	76	78	75	77	74	78	84	82	81	87	86	86
210 (3025)	77	81	79	83	77	81	79	79	77	82	86	84	88	89	88	87
250 (3625)	77	81	80	84	77	81	79	79	78	84	86	85	83	90	89	88

Industrial Version* – Sound Level dB(a) DIN (NFPA) ‡

Pressure bar (psi)	PVH057		PVH063		PVH074		PVH081		PVH098		PVH106		PVH131		PVH141	
	1200 r/min	1800 r/min	1200 r/min	1800 r/min	1200 r/min	1800 r/min	1500 r/min	1800 r/min	1200 r/min	1800 r/min	1500 r/min	1800 r/min	1200 r/min	1800 r/min	1200 r/min	1500 r/min
70 (1015)	64	71	66	73	65	73	73	79	69	75	73	81	75	80	74	74
140 (2030)	68	73	70	72	69	74	72	78	70	76	75	84	77	84	76	78
210 (3025)	70	76	73	76	73	77	75	79	75	80	77	85	80	87	79	81
250 (3625)	71	78	73	77	73	78	76	79	77	82	78	85	82	89	79	82

‡ DIN: Computed semi-anechoic values per DIN 45635. NFPA: Recorded in a semi-anechoic chamber in accordance with NFPA Recommended Standard 13.9.70.12. All values shown are the higher of either maximum displacement or fully compensated conditions.

* Q250 Valve Plate

Due to the rounding of numbers during conversion, the difference between DIN and NFPA ratings may be one or two numbers; for example 69 (71) or 69 (72).

Control Options

Pressure Compensator Control (A)

The pump will provide a continuously modulated flow to meet changing load demands at a pre-adjusted compensator pressure. At pressures below the compensator setting, the pump will operate at maximum displacement. The compensator is available in two pressure ranges.

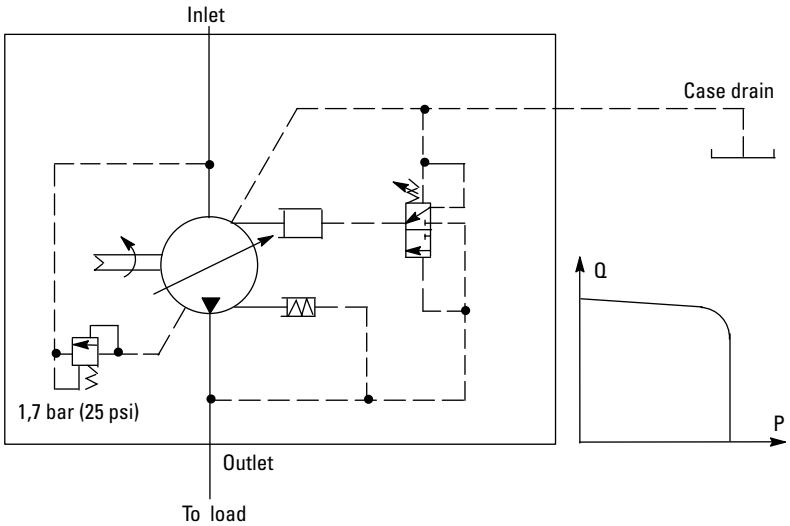

Load Sensing and Pressure Compensator Control (B)

The pump will provide power matching of pump output to system load demand, maximizing efficiency and improving load metering characteristics of any directional control valve installed between the pump and the load.

Load sensing ensures that the pump always provides only the amount of flow needed by the load. At the same time, the pump operating pressure adjusts to the actual load pressure plus a pressure differential required for the control action. When the system is not demanding power, the load sense control will operate in an energy-saving stand-by mode.

Typically, the differential pressure is that between the pressure inlet and service port of a proportionally controlled directional valve, or a load sensing directional control valve. The standard differential pressure setting for load sense is 20 bar (290 psi), but can be adjusted to between 17 and 30 bar (247 and 435 psi) on the pump.

If the load pressure exceeds the system pressure setting, the pressure compensator destrokes the pump. The load sensing line must be as short as possible and can also be used for remote control or unloading of the pump pressure. For remote control purposes, it is recommended that you contact your Vickers representative for the correct configuration of the control.

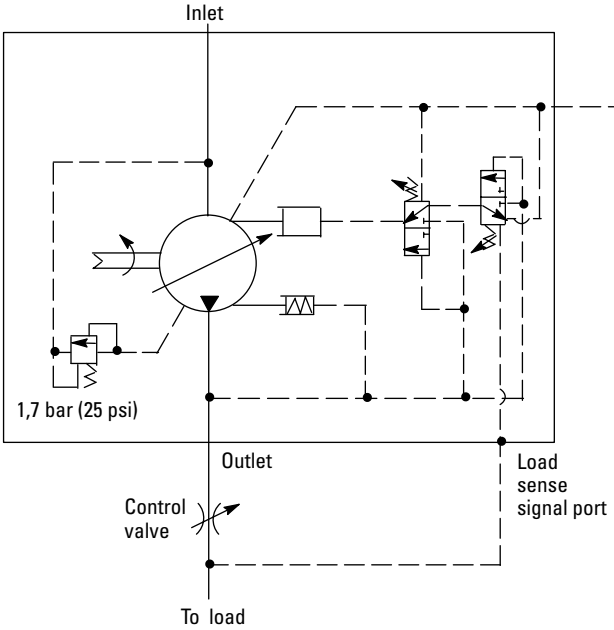

Control Options

Pressure and Flow Compensator with Unloading Valve for Accumulator Circuit

This pump control functions as a load-sensing pressure compensator that unloads the pump at a preset pressure and loads the pump after preset pressure drop.

Unloading Valve Circuit (N)

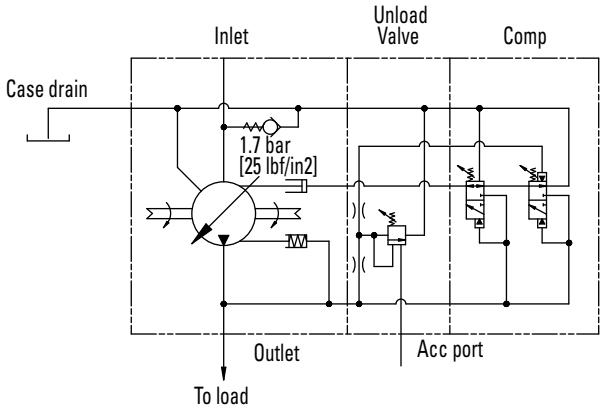

Pressure and Torque Limiter Control (D)

The pump senses pressure and flow and starts destroking at a predetermined input torque level. The rate of flow reduction is normally tailored to follow the maximum power capability curve of the prime mover. Input torque is limited while the pressure compensator limits the system pressure.

When the input speed remains constant (i.e. industrial drives), the torque limiter acts as an input power limiter. This allows a smaller electric motor to be used if maximum pressure and maximum flow are not required at the same time. At low load levels, the control permits high pump displacement and high load speeds. Under heavy loads, speed is reduced, preventing stalling of the prime mover. In the case of variable speed drives (I.C. engines), this function provides, in addition to pressure compensation or limiting, a torque limiting ability that can be adjusted to the torque/speed characteristics of the engine.

The start of torque limiting (pump-destroking) is pressure dependent. This pressure is selectable (see model code) and is factory preset to between 30% and 80% of the maximum pressure control setting. The minimum torque pressure setting is 40 bar (580 psi).

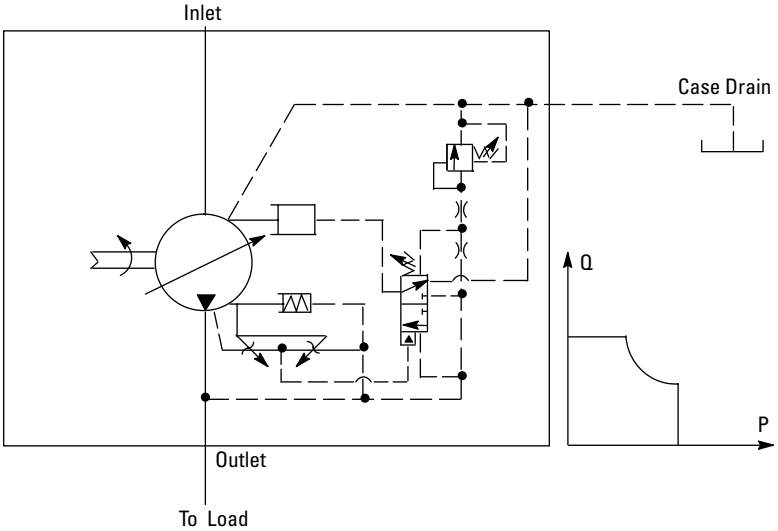

Summation Control (C)

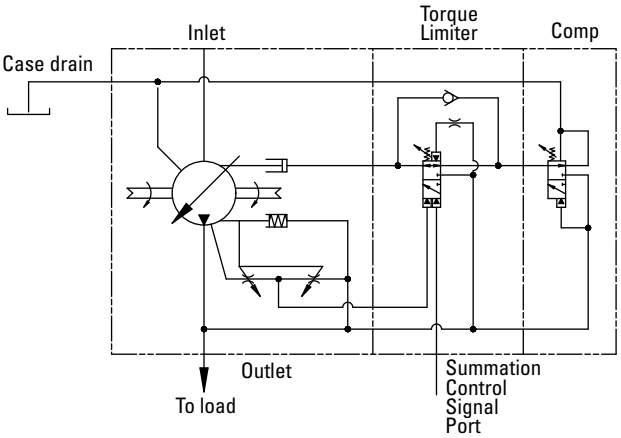

Control Options

Pressure and Torque Limiting, Plus Load Sensing, Control (E)

The pump's control functions like a load sensing control, but with additional torque limiting tailored to the size of the drive motor selected. The limiting function is the same as for a pressure compensator with torque limiting (see D description, previous page). The combination of the two controls provides the following benefits:

1. The energy savings of a variable displacement load sensing control.
2. The pump pressure follows the load pressure.
3. The torque control allows smaller drive motors to be used.
4. The pressure compensator de-strokes the pump as maximum pressure is reached.
5. The pump pressure can also be remotely controlled using the load sense line. The E control allows complete control of flow and pressure, either mechanically or electrically, if used with proportional valves.

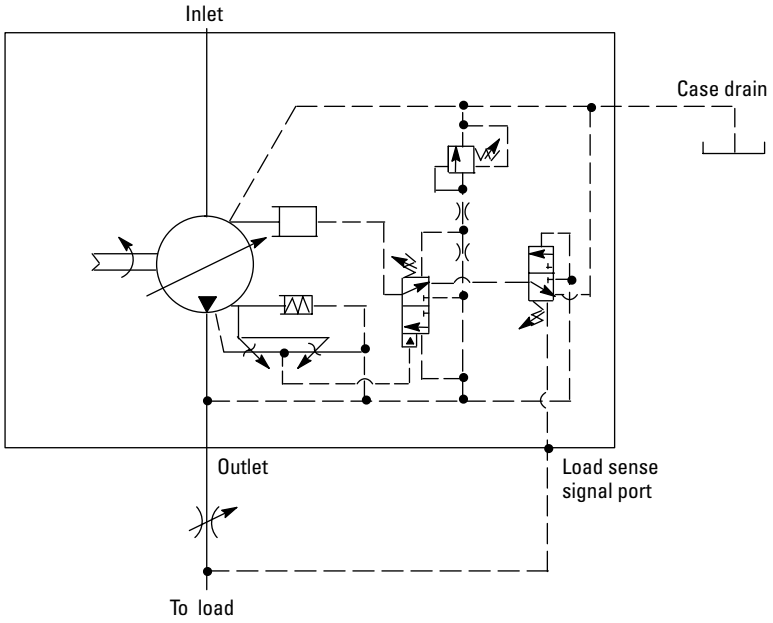

Sumation Control (F)

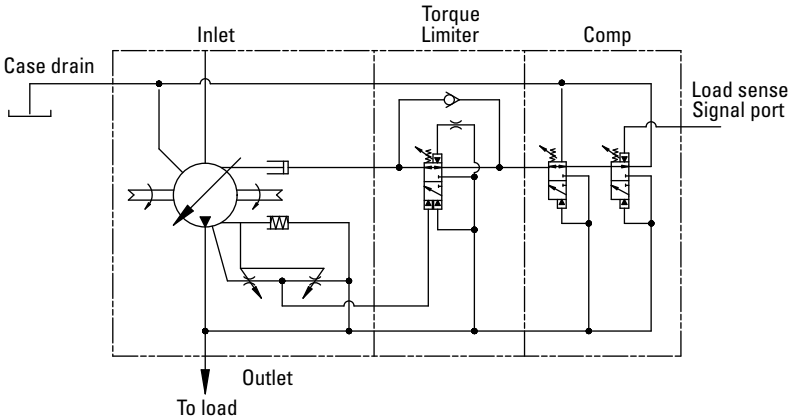

Industrial Control Compensator

This pump is intended for use when multiple, remote, or electrically controlled compensating settings, with or without load sensing or, with or without torque control are desired.

Pressure compensation is obtained when an internal plug is removed, the load-sense signal port is kept plugged, and internal pilot pressure is applied to the spring chamber of the control spool. For pressure compensation with load sensing, the internal plug stays, the load-sense signal port is unplugged, and pilot pressure is externally applied.

An external relief valve (not supplied) controls spring chamber pressure. The externally adjustable spring determines the differential pressure setting of the control. Outlet pressure is limited to the value of the spring chamber (pressure port) pressure, plus control differential pressure.

(continued on next page)

Pressure Compensating Without Load Sensing (G)

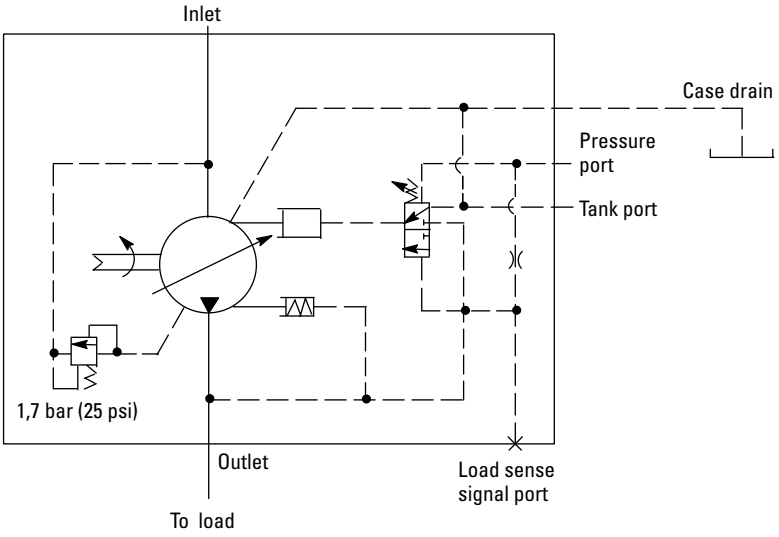

Industrial Control Compensator

(continued)

Spring chamber (pilot) pressure is separated from outlet pressure by an internal orifice. Outlet pressure shifts the spool when pressure drop across the orifice reaches the differential pressure setting, and the pump de-strokes.

The relief valve can be mounted to an NFPA-D03/ISO 4401-03 pad on the pump control, or remotely located via tapping and blanking plates installed on the pad. See "Ordering Procedure", page 35, for more on valves and plates.

The standard factory-set differential pressure setting of the pump control is 20 bar (290 psi) and is not specified in the pump model number. Any other ordered differential pressure, within the control's adjustable pressure range of 17–35 bar (247–508 psi), will be specified in the model number.

Pressure Compensating with Load Sensing (H)

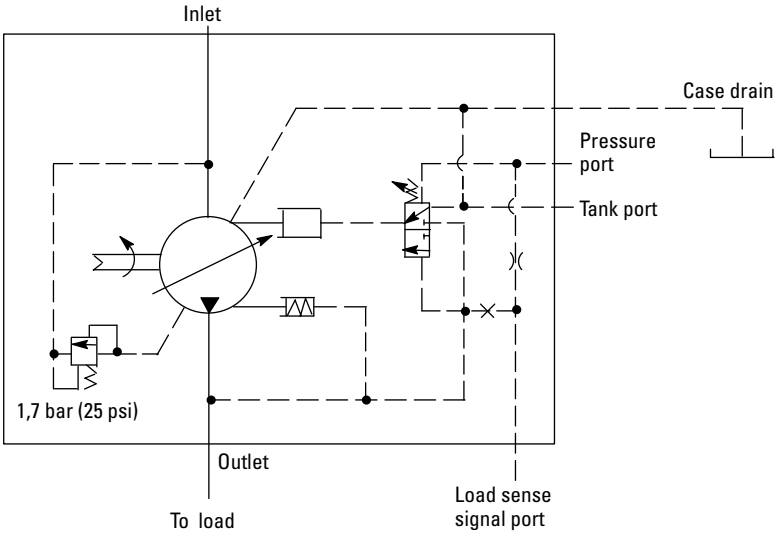

Pressure Compensating with Load Sensing and Torque Control (J)

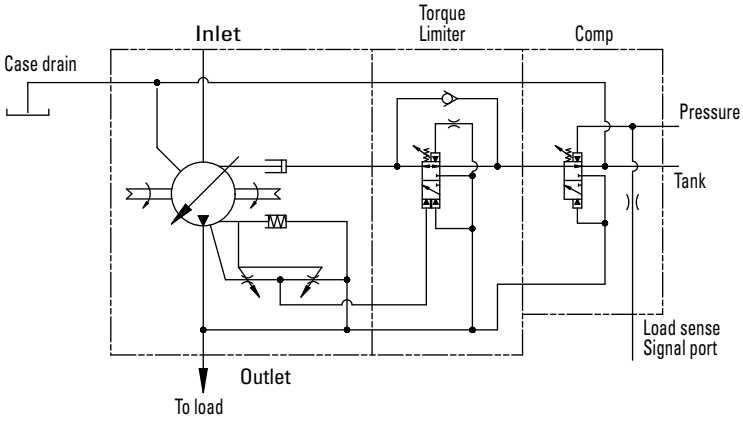

Input Shaft Selection Data

Multiple pump arrangements can be formed by a PVH thru-drive pump and any suitable pump (single or multiple) that can be installed on the SAE "A", "B", or "C" rear-mounting option available for the thru-drive pump.

It is important to check that maximum torque values for individual pump sections, or complete pumps, occurring in a specific application will not exceed the limits tabled below.

Shaft Code	Shaft Designation	Basic Pump Series	Thru-drive Pump Series	Maximum Input Torque Nm (lb. in.)	Maximum Thru-drive Output Torque Nm (lb. in.)
N	ISO 3019/2 – E32N	PVH057/063	–	450 (3,980)	–
	short straight keyed	PVH074/081	–	450 (3,980)	–
1	SAE "C" (J744-32-1)	PVH057/063	PVH057/063	450 (3,980)	335 (2,965)
	straight keyed	PVH074/081	–	450 (3,980)	–
		PVH098/106	–	450 (3,980)	–
2	SAE "C" (J744-32-4)	PVH057/063	PVH057/063	640 (5,660)	335 (2,965)
	14T 12/24 DP FRSF spline	PVH074/081	–	640 (5,660)	–
		PVH098/106	–	640 (5,660)	–
3	SAE "CC" (J744-38-4)	–	PVH074/081	1215 (10,750)	460 (4.070)
	17T 12/24 DP FRSF spline	–	PVH098/106	1215 (10,750)	640 (5,660)
		PVH131/141	PVH131/141	1215 (10,750)	640 (5,660)
12	SAE "D" (J744-44-4)	PVH131/141	PVH131/141	1215 (10,750)	640 (5,660)
	13T 8/16 DP FRSF spline				
13	SAE "CC" (J744-38-1)	–	PVH074/081	765 (6,770)	460 (4.070)
	straight keyed	–	PVH098/106	765 (6,770)	460 (4.070)
		PVH131/141	–	765 (6,770)	–
16	SAE "D" (J744-44-1)	–	PVH131/141	1200 (10,620)	640 (5,660)
	straight keyed				

Note: Any deviation from maximum input torques must be approved by Eaton. To assure developed thru-drive loads are within PVH pump limitations, actual torque values must not exceed values shown.

Input Shaft Dimensions

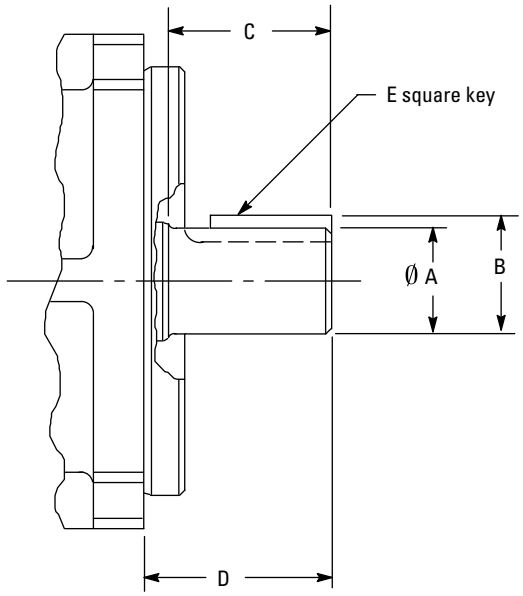

Straight Keyed Shafts*

Shaft Code	Shaft Designation	A	B	C	D	E
1	SAE "C" (J744-32-1)	31,75 (1.25)	35,32 (1.38)	48,0 (1.89)	56,0 (2.20)	7,93 (.312)
13	SAE "CC" (J744-38-1)	38,10 (1.50)	42,39 (1.67)	54,0 (2.12)	62,0 (2.44)	9,52 (.375)
16	SAE "D" (J744-44-1)	44,45 (1.75)	49,46 (1.95)	67,0 (2.64)	75,0 (2.95)	11,11 (.438)
N	ISO 3019/2–E32N	32,00 (1.26)	35,00 (1.38)	58,0 (2.28)	68,1 (2.68)	10,00 (.393)

* See torque limits on previous page.

Spline Shafts*

Shaft code	Shaft designation	Number of teeth	C	D
2	SAE "C" (J744-32-4)	14	48,0 (1.89)	56,0 (2.20)
3	SAE "CC" (J744-38-4)	17	54,0 (2.13)	62,0 (2.44)
12	SAE "D" (J744-44-4)	13	67,0 (2.64)	75,0 (2.95)

* See torque limits on previous page.

Installation Dimensions

Basic Pump with Pressure Compensator and Load Sense Controls

Dimensions in mm (inches)

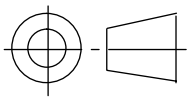

3rd angle projection

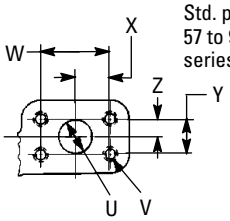

Outlet port. SAE J518C 4-bolt flange. Std. pressure (code 61) series for 57 to 98 sizes. High pressure (code 62) series for 131 size.

View A-A

Load sense adjustment. Approx. 14 bar (200 psi) differential change per revolution of screw.

Centerline of outlet port

Optional drain port. For .500 O. D. tube, .750-16 UNF-2B thread (PVH057 & 74). For .625 O. D. tube, .875 –14 UNF–2B thread (PVH098 & 131).

Compensator adjustment. Approx. 28 bar (400 psi) change per revolution of screw.

Load sensing signal port. SAE O-ring boss for .375 O. D. tube. .562-18 UNF -2B thread.

Outlet pressure gauge port. M10 thd. 25,4 (1.00) deep. O-ring boss. (plugged)

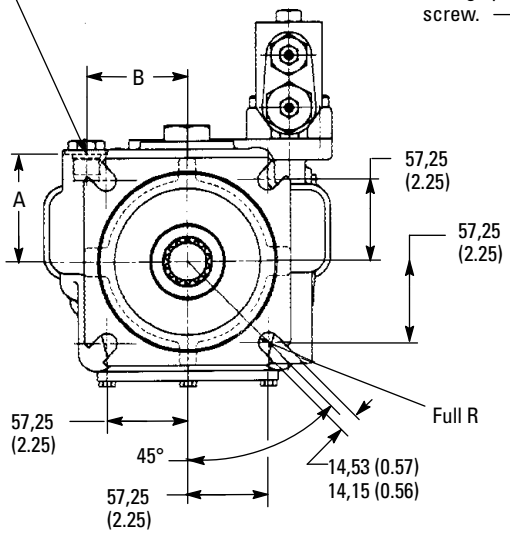

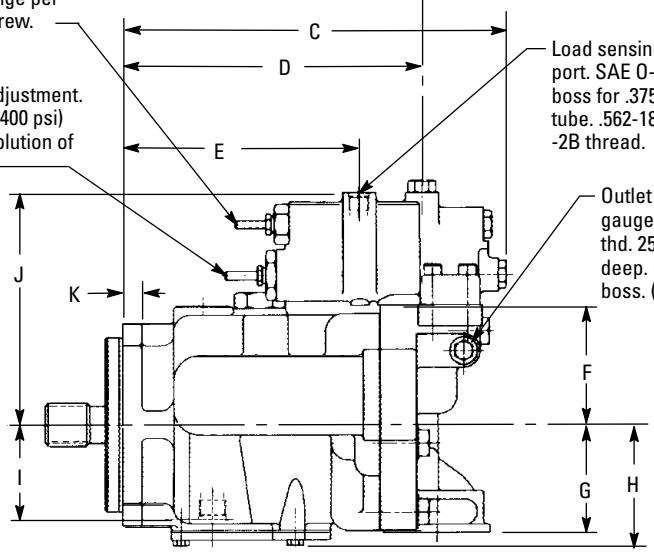

"F" model: .500-13 UNC -2B thd. 1.06 deep min. for PVH057/074. 1.19 deep min. for PVH098/131. 4 holes.

"M" model: M12 thd. 29 deep min. for PVH057/074. 31 deep min. for PVH098/131. 4 holes.

Drain port. SAE O-ring boss. .500 O. D. tube, .750-16 UNF-2B thread (PVH057 & 074). .626 O. D. tube, .875-14 UNF-2B thread (PVH098 & 131).

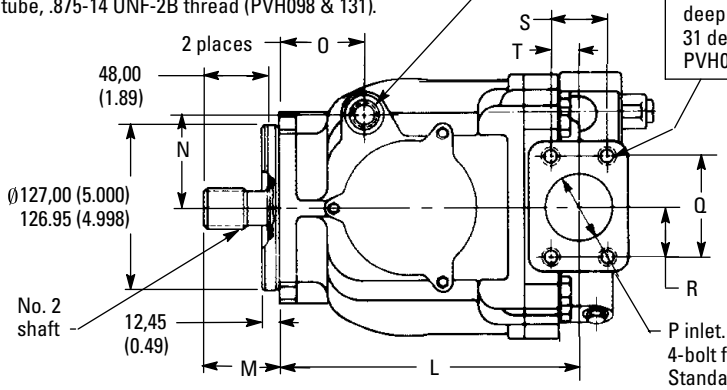

P inlet. SAE J518C 4-bolt flange port. Standard pressure series.

For shaft options and dimensions, see pages 16 and 17. Standard SAE pump mounting flange shown; see page 26 for optional SAE 2-bolt/4-bolt and ISO flanges. See page 29 for shaft-up mounting option.

Installation Dimensions

Basic Pump with Pressure Compensator and Load Sense Controls

	A	B	C	D	E	F	G	H	I
PVH057	76,0	71,0	293,0	216,5	171,3	86,0	79,0	88,0	69,0
PVH063	(2.99)	(2.79)	(11.54)	(8.52)	(6.74)	(3.39)	(3.11)	(3.46)	(2.71)
PVH074	88,0	70,0	306,6	241,2	194,3	92,0	94,0	95,0	81,0
PVH081	(3.46)	(2.75)	(12.07)	(9.50)	(7.65)	(3.62)	(3.70)	(3.74)	(3.19)
PVH098	93,1	85,0	323,5	251,3	206,1	94,5	87,5	97,1	80,1
PVH106	(3.67)	(3.35)	(12.74)	(9.89)	(8.11)	(3.72)	(3.44)	(3.82)	(3.15)
PVH131	109,4	88,8	377,0	280,4	230,4	120,0	109,0	107,4	84,8
PVH141	(4.31)	(3.50)	(14.84)	(11.04)	(9.07)	(4.72)	(4.29)	(4.23)	(3.34)

	J	K	L	M	N	O	P	Q	R
PVH057	168,0	14,0	227,4	56,1	71,0	64,8	50,8	77,77	38,88
PVH063	(6.6)	(0.55)	(8.95)	(2.21)	(2.80)	(2.55)	(2.0)	(3.06)	(1.53)
PVH074	174.0	15,0	250,1	56,0	70,0	68,0	50,8	77,77	38,88
PVH081	(6.85)	(0.59)	(9.85)	(2.20)	(2.75)	(2.68)	(2.0)	(3.06)	(1.53)
PVH098	176,5	16,0	269,3	55,5	85,0	74,2	63,5	88,9	44,45
PVH106	(6.95)	(0.63)	(10.60)	(2.18)	(3.35)	(2.92)	(2.5)	(3.50)	(1.75)
PVH131	202,0	15,0	298,6	62,0	88,8	70,6	63,5	88,9	44,45
PVH141	(7.95)	(0.59)	(11.75)	(2.44)	(3.50)	(2.78)	(2.5)	(3.50)	(1.75)

	S	T	U	V	W	X	Y	Z
PVH057	42,88	21,44	25,4	M10x1,5	52,37	26,18	26,19	13,10
PVH063	(1.69)	(0.84)	(1.0)	(.375-16)	(2.06)	(1.03)	(1.03)	(0.52)
PVH074	42,88	21,44	25,4	M10x1,5	52,37	26,18	26,19	13,10
PVH081	(1.69)	(0.84)	(1.0)	(.375-16)	(2.06)	(1.03)	(1.03)	(0.52)
PVH098	50,8	25,4	25,4	M10x15	52,37	26,19	26,19	13,10
PVH106	(2.0)	(1.0)	(1.0)	(.375-16)	(2.06)	(1.03)	(1.03)	(0.52)
PVH131	50,8	25,4	31,75	M14x2,0	66,68	33,34	31,75	15,88
PVH141	(2.0)	(1.0)	(1.25)	(.500-13) (2.63)	(1.31)	(1.25)	(0.63)	

Installation Dimensions

Basic Pump. Rear View with Various Controls

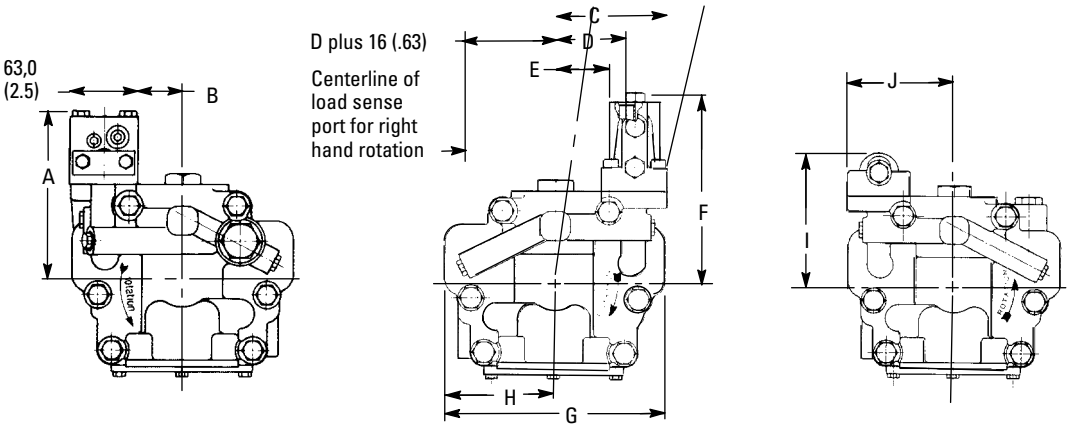

Right hand rotation, pressure compensated and torque limit model

Left hand rotation, pressure compensated and load sensing model

Right hand rotation, pressure compensated model

	A	B	C	D	E	F	G	H	I	J
PVH057	176,45	41,0	102,7	64,5	49,0	176,6	203,0	101,5	127,0	102,7
PVH063	(6.95)	(1.61)	(4.04)	(2.54)	(1.93)	(6.95)	(7.99)	(4.00)	(5.00)	(4.04)
PVH074	182,45	47,5	109,2	71,0	55,5	182,6	224,0	112,0	133,0	109,2
PVH081	(7.18)	(1.87)	(4.30)	(2.79)	(2.19)	(7.18)	(8.82)	(4.41)	(5.23)	(4.30)
PVH098	195.45	41,0	102,7	65,5	49,0	185,1	233,0	116,5	135,5	102,7
PVH106	(7.69)	(1.61)	(4.04)	(2.54)	(1.93)	(7.280)	(9.17)	(4.59)	(5.33)	(4.04)
PVH131	210,50	63,6	125,2	87,0	71,5	210,6	254,2	127,1	161,0	125,2
PVH141	(8.29)	(2.50)	(4.92)	(3.42)	(2.81)	(8.29)	(10.00)	(5.00)	(6.37)	(4.92)

*Add 16,0 (.63) to dimension D for right hand rotation model.

Pump with Pressure Compensation, Load Sense and Torque Limit Controls

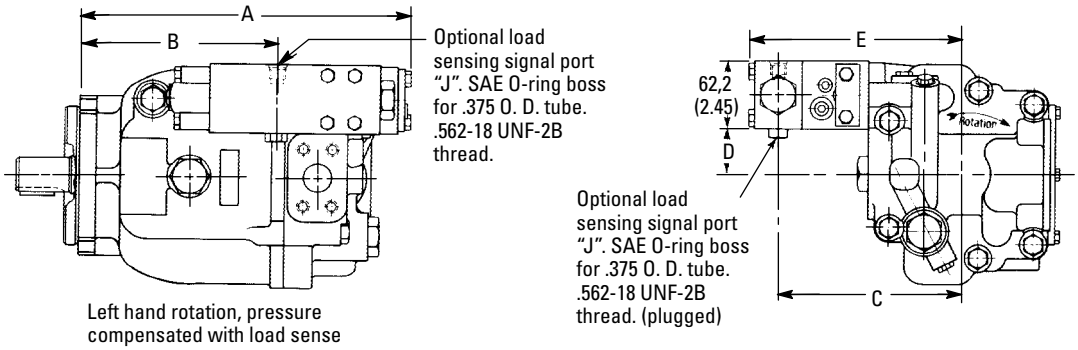

Left hand rotation, pressure compensated with load sense and torque limit model

	A	B	C	D	E
PVH057	316,3	177,4	168,1	41,4	195,4
PVH063	(12.45)	(6.98)	(6.62)	(1.63)	(7.69)
PVH074	335,5	200,1	174,1	47,9	201,4
PVH081	(13.34)	(7.88)	(6.85)	(1.86)	(7.93)
PVH098	351,0	212,3	187,1	41,4	214,4
PVH106	(13.82)	(8.36)	(7.37)	(1.63)	(8.44)
PVH131	375,3	236,6	202,2	63,8	229,5
PVH141	(14.78)	(9.31)	(7.96)	(2.51)	(9.04)

Installation Dimensions

Pump with IC Compensator (Remotely Controllable Pressure Compensator, and Optional Load Sensing)

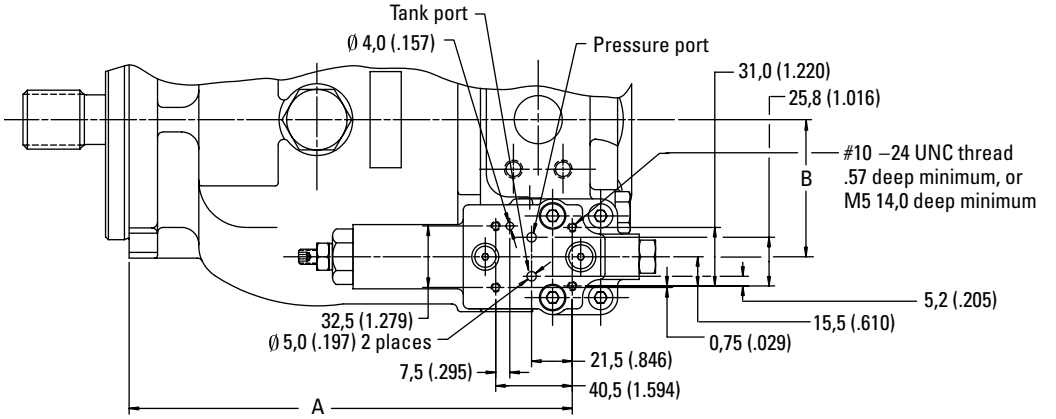

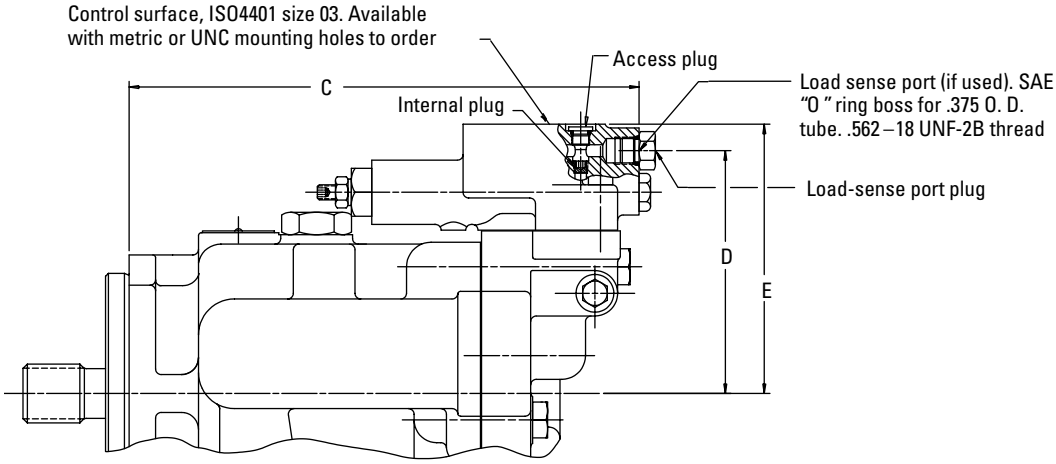

Pressure compensator:

Remove access plug, using 1/8 inch hex wrench. Remove internal plug, using 5/32 inch hex wrench. Replace access plug and torque to 12,1–12,4 Nm (107–110 lb. in.). Attach relief valve hardware (not supplied) to control surface. See page 15 for more details.

Pressure compensator with load sensing:

Remove load-sense port plug. (Internal plug must remain in place.) Attach line to load-sense port. Pressure decay rate of this line must not exceed 11 kbar/second (160 kpsi/second). Attach relief valve hardware (not supplied) to control surface. See page 15 for more details.

	A	B	C	D	E
PVH057	234,5	72,5	269,9	128,0	142,0
PVH063	(9.23)	(2.85)	(10.62)	(5.04)	(5.59)
PVH074	257,2	79,0	292,6	134,0	148,0
PVH081	(10.12)	(3.11)	(11.52)	(5.27)	(5.83)
PVH098	269,3	72,5	304,7	136,5	150,5
PVH106	(10.60)	(2.85)	(12.00)	(5.37)	(5.92)
PVH131	293,6	95,0	329,0	162,0	176,0
PVH141	(11.56)	(3.74)	(12.95)	(6.38)	(6.93)

Installation Dimensions

Pump with Adjustable Maximum Volume Stop

This option allows maximum pump delivery to be externally adjusted from 100 percent down to 25 percent. To assist initial priming, adjust stop to allow at least 40 percent of maximum delivery. Adjust by loosening locknut and turning adjusting rod clockwise to decrease maximum delivery, or counter-clockwise to increase maximum delivery. When desired setting is obtained, torque locknut to 25-50 Nm (18-36 lb. ft.).

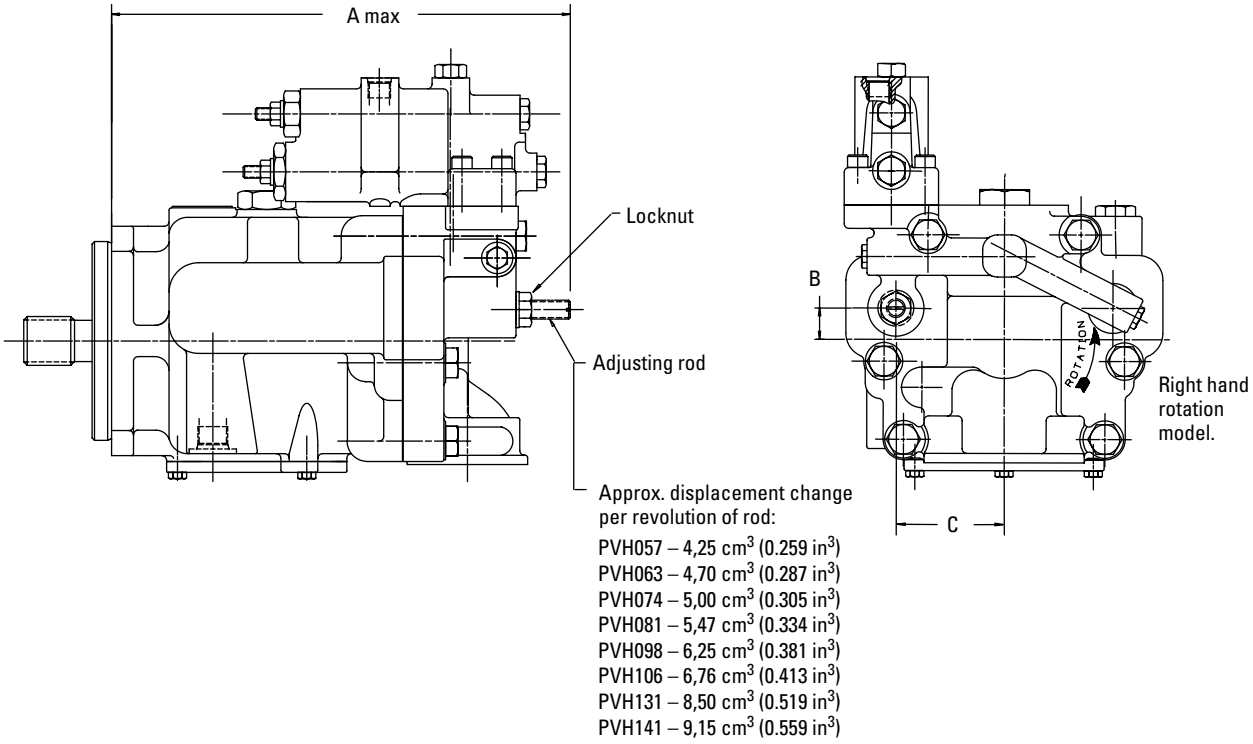

	A	B	C
PVH057	293,0	20,0	69.5
PVH063	(11.53)	(.79)	(2.74)
PVH074	306,6	22,0	76,0
PVH081	(12.07)	(.87)	(2.99)
PVH098	323,5	27,5	81,0
PVH106	(12.74)	(1.08)	(3.19)
PVH131	377,0	37,5	88,8
PVH141	(14.84)	(1.48)	(3.50)

Installation Dimensions

Thru-drive Pumps with SAE "A" Rear Pad

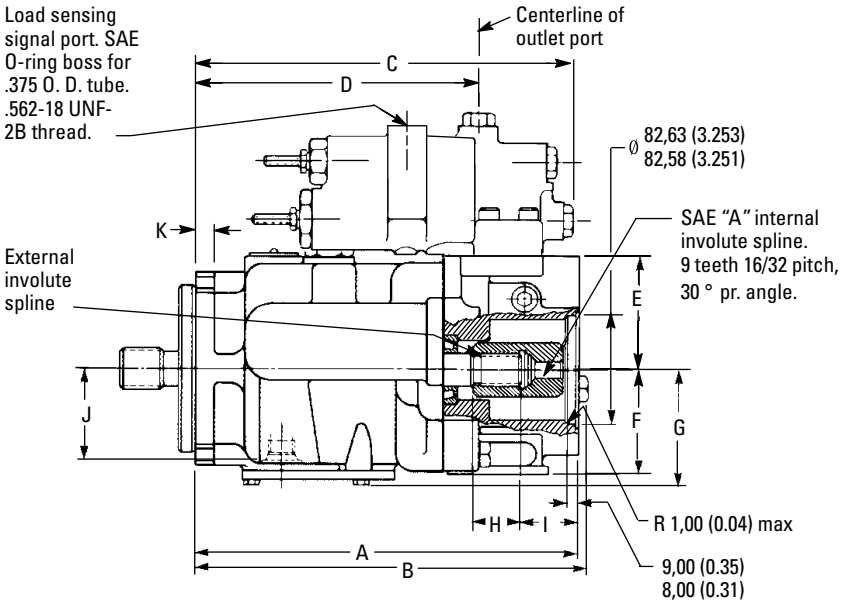

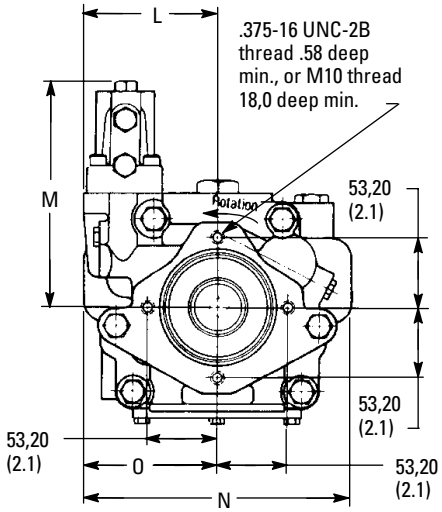

For shaft options and dimensions, see page 16 and 17. See page 26 for optional cover for rear pad.

Note: The O-ring for sealing the rear mounting pad is furnished with the pump. The rear drive coupling shown must be ordered separately; see page 23.

Right hand rotation, pressure compensated and load sensing model.

	A	B	C	D	E	F	G	H
PVH057	287,9	295,4	275.8	216,4	86,0	79,0	88,0	36,4
PVH063	(11.3)	(11.6)	(10.86)	(8.52)	(3.38)	(3.11)	(3.46)	(1.43)
PVH074	310,6	318,1	300,5	241,2	92,0	94,0	95,0	38,5
PVH081	(12.23)	(12.52)	(11.83)	(9.50)	(3.62)	(3.70)	(3.74)	(1.51)
PVH098	322,8	N/A	312,7	251,3	94,5	87,5	97,1	33,0
PVH106	(12.71)		(12.31)	(9.89)	(3.72)	(3.44)	(3.82)	(1.30)
PVH131	347,1	N/A	337,0	280,4	120,0	109,0	107,4	35,3
PVH141	(13.660)		(13.27)	(11.04)	(4.72)	(4.29)	(4.23)	(1.39)

	I	J	K	L	M	N	O
PVH057	43,6	69,0	14,0	102,7	176,6	203,0	101,5
PVH063	(1.72)	(2.71)	(0.55)	(4.04)	(6.95)	(7.99)	(4.00)
PVH074	43,8	81,0	15,0	109,2	182,6	224,0	112,0
PVH081	(1.72)	(3.19)	(0.59)	(4.30)	(7.18)	(8.82)	(4.41)
PVH098	44,6	80,1	16,0	102,7	185,1	233,0	116,5
PVH106	(1.75)	(3.15)	(6.30)	(4.04)	(7.28)	(9.17)	(4.59)
PVH131	44,7	84,8	15,0	125,2	210,6	254,2	127,1
PVH141	(1.76)	(3.34)	(0.59)	(4.93)	(8.29)	(10.0)	(5.00)

Installation Dimensions

Thru-drive Pumps with SAE "B" Rear Pad Adapter

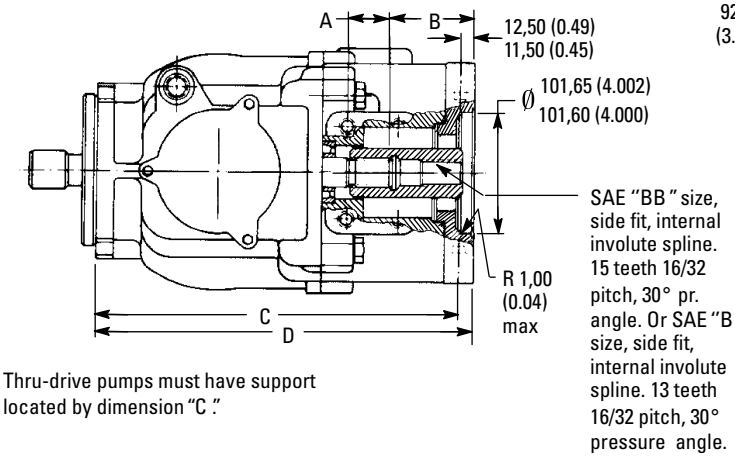

Thru-drive pumps must have support located by dimension "C".

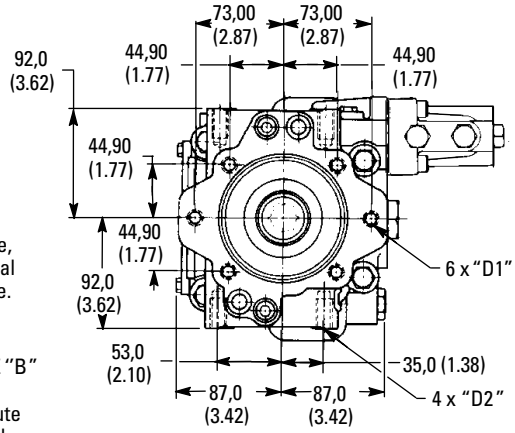

SAE "B" rear mounting. Mounting pad is machined to accept AS568-155 O-ring. Mounting pad is connected to pump case and must be sealed.

Thru-drive Pumps with SAE "C" Rear Pad Adapter

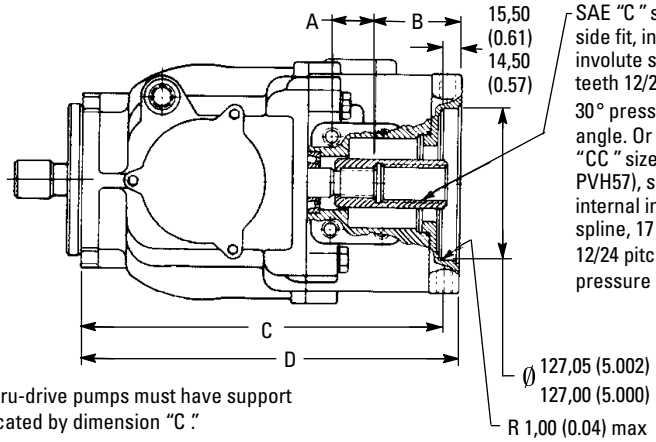

Thru-drive pumps must have support located by dimension "C".

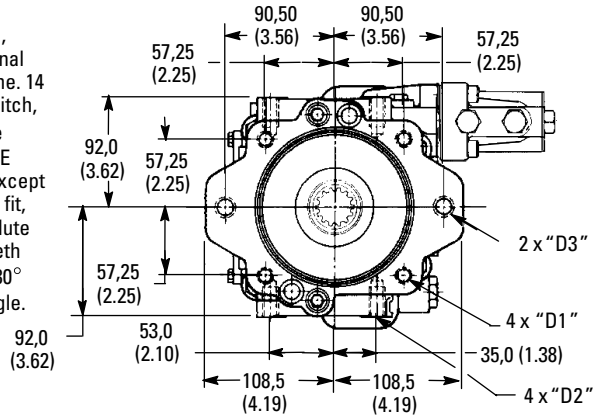

SAE "C" rear mounting. Mounting pad is machined to accept AS568-159 O-ring. Mounting pad is connected to pump case and must be sealed.

Pump Model	A	B	C	D
PVH057	36,4	68,8	300,4	312,9
PVH063	(1.43)	(2.71)	(11.82)	(12.32)
PVH074	33,5	68,3	323,1	335,6
PVH081	(1.32)	(2.69)	(12.72)	(13.21)
PVH098	33,0	69,8	335,3	347,7
PVH106	(1.30)	(2.75)	(13.20)	(13.69)
PVH131	35,3	69,7	359,6	372,1
PVH141	(1.39)	(2.74)	(14.16)	(14.65)

	D1	D2	D3
Metric	M14x2,00	M12x1,75	M16x2,00
	25 deep	25 deep	25 deep
Inch	0,500-13	0.500-13	0.625-11
	UNC-2B	UNC-2B	UNC-2B
	1.0 deep	1.0 deep	1.0 deep

Note: The O-ring for sealing the rear mounting pad is furnished with the pump. The rear drive couplings shown must be ordered separately; see following page.

Thru-drive Flange Kit and Shaft Coupling

Front Pump Model Series	SAE (J744) Mounting Flange for Rear Pump	Mounting Flange Adapter Kit Number* Metric Threads	Inch Threads	Coupling Part Number**
PVH057	A (J744-82-2)	None required	None required	526682
PVH063	B (J744-101-2/4)	876394	876390	526694
	BB (J744-101-2/4)	876394	876390	526695
	C (J744-127-2/4)	876392	876389	526696
PVH074	A (J744-82-2)	None required	None required	864460
PVH081	B (J744-101-2/4)	876394	876390	864457
	BB (J744-101-2/4)	876394	876390	864459
	C (J744-127-2/4)	876392	876389	864458
	CC (J744-127-2/4)	876392	876389	864461
PVH098	A (J744-82-2)	None required	None required	877039
PVH106	B (J744-101-2/4)	876394	876390	877040
PVH131	BB (J744-101-2/4)	876394	876390	877044
PVH141	C (J744-127-2/4)	876392	876389	877045
	CC (J744-127-2/4)	876392	876389	877046

*The basic PVH thru-drive pump has an SAE "A" pad on the rear. An SAE "B" or "C" pad rear mounting requires flange adapters. Required adapters can be provided if specified in the pump model code. The best combination of price, availability and flexibility is achieved by ordering a PVH SAE "A" thru-drive model and the applicable PVH mounting flange adapter separately. For example, a PVH074C-RCF-3S-10-C25-31 may also be ordered as a PVH074C-RAF-3S-10-C25-31 and a 876389 flange adapter.

** Thru-drive shaft couplings must be ordered separately to drive the second pump.

Typical Rear Pumps for Thru-drive Assemblies

Mounting	Piston pump Series	Shaft Code	Vane pump Series	Shaft Code
SAE A	PVQ10/13	3	V10	11
			V20	62
SAE B	PVQ20/32	3	20V	151
	PVQ40/45	3	25V	11
	PVE19/21	9	V2020	11
SAE BB	PVE19/21	2		
	TA19	2		
SAE C	PVH057/063	2	35V	11
	PVH074/081	2	352*V	11
	PVH098/106	2		
SAE CC	PVH131/141	3		

NOTE: The above Vickers pumps are examples of rear pumps for the thru-drive pumps dimensioned on pages 25 and 26. The thru-drive torque limits identified in the chart on page 16 must not be exceeded when applying these multiple pump systems.

Installation Dimensions

ISO 3019/2-125B4HW Mounting Flange for PVH057 and PVH074 Pumps

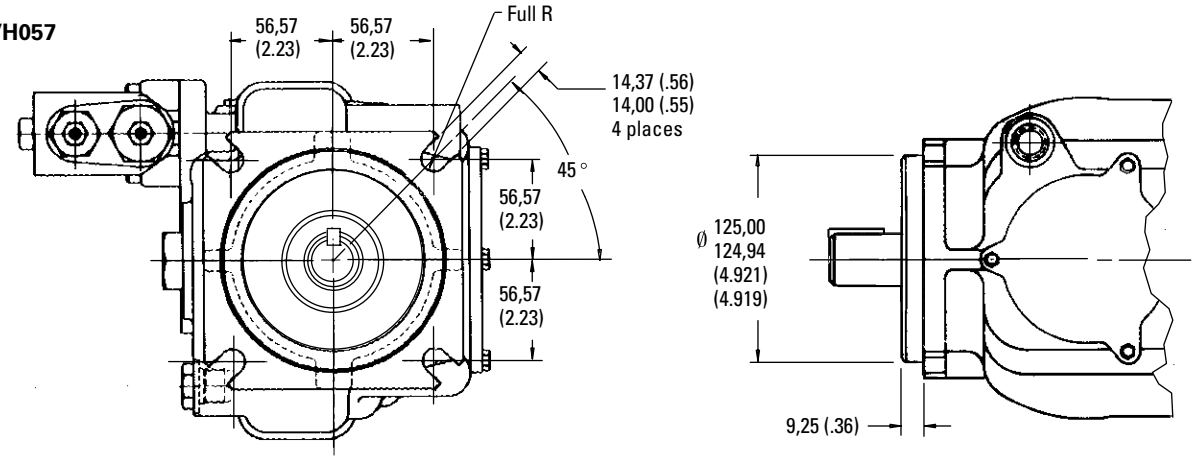

SAE 2–bolt/4-bolt Mounting ("027" Option) for PVH057, PVH074 and PVH098 Pumps

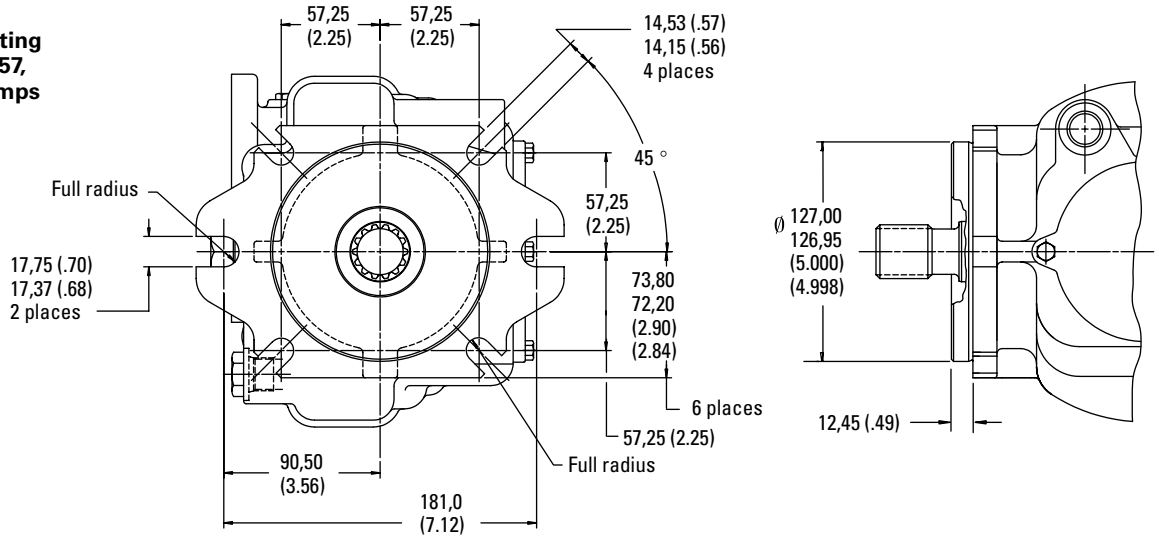

Cover ("031" Option) for Thru-drive SAE "A" Rear Mounting Flange

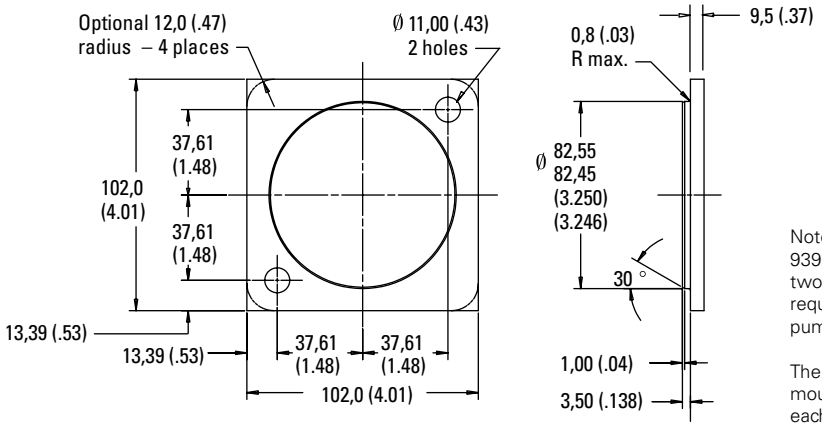

Note: When cover (part number 939790) is ordered as a separate part, two screws (part number 170177) are required to attach the cover to the pump's rear mounting flange.

The O-ring for sealing the rear mounting flange is furnished with each thru-drive pump.

Installation Dimensions

Pumps for Shaft-up Operation (Vertical Mount, "057" Option)

Model	Dim. "A"
PVH057	25,68/24.94
PVH063	(1.01/0.98)
PVH074	26,64/25,90
PVH081	(1.05/1.02)
PVH098	25,82/25,08
PVH106	(1.02/0.99)
PVH131	25,12/24,38
PVH141	(.99/0.96)

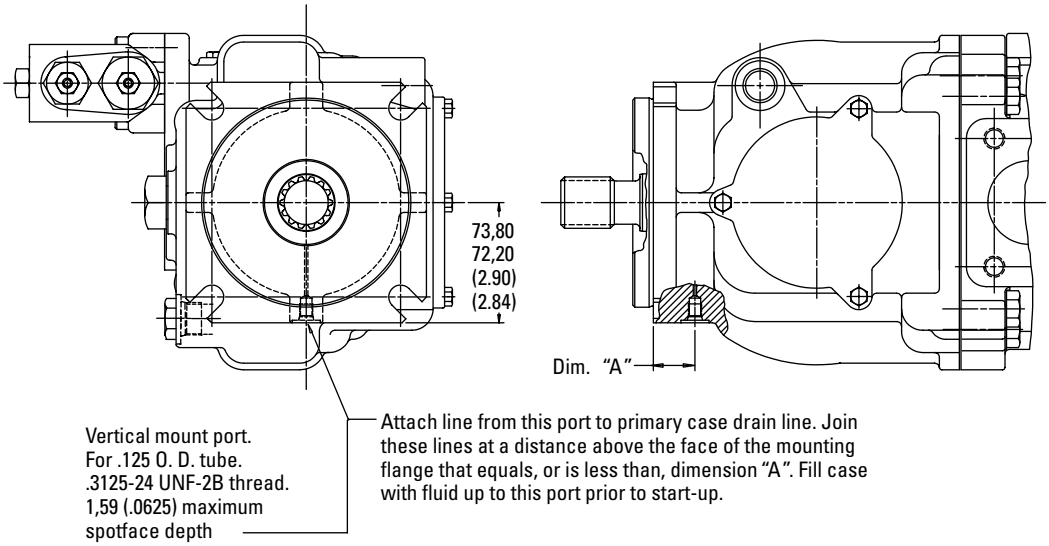

Model FB-C4-10 Foot Mounting Kit for All PVH Pumps

Each kit (part no. 02-143419) includes bracket shown and four screws for mounting to the pump. Kits are not included with pumps and must be ordered separately by model number.

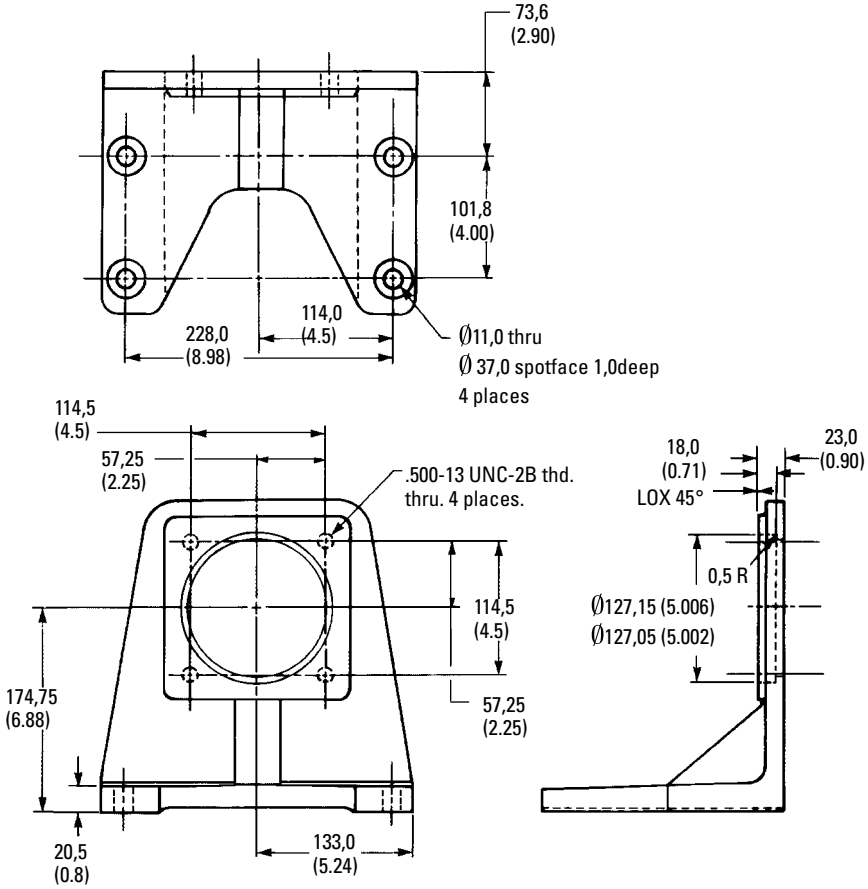

Application Data

Hydraulic Fluids and Temperature Ranges

Use anti-wear hydraulic oil, or automotive type crankcase oil (designations SC, SD, SE or SF) per SAE J183 FEB80.

Select a viscosity grade that will allow optimum viscosity, between 40 cSt (180 SUS) and 16cSt (80 SUS), to be achieved.

Cold start capability at 5000 cSt. Max. intermittent temp. 104° C (220° F).

For further information, see 694.

Fluid Cleanliness

Proper fluid condition is essential for long and satisfactory life of hydraulic components and systems. Hydraulic fluid must have the correct balance of cleanliness, materials and additives for protection against wear of components, elevated viscosity and inclusion of air.

Essential information on the correct methods for treating hydraulic fluid is included in Eaton publication 561; "Vickers Guide to Systemic Contamination Control," available from your local Eaton distributor or by contacting Eaton. Recommendations on filtration and the selection of products to control fluid condition are included in 561.

Recommended cleanliness levels, using petroleum oil under common conditions, are based on the highest fluid pressure levels in the system and are coded in the chart below. Fluids other than petroleum, severe service cycles or temperature extremes are cause for adjustment of these cleanliness codes. See Eaton publication 561 for exact details.

Eaton products, as any components, will operate with apparent satisfaction in fluids with higher cleanliness codes than those described. Other manufacturers will often recommend levels above those specified. Experience has shown, however, that life of any hydraulic components is shortened in fluids with higher cleanliness codes than those listed below. These codes have been proven to provide a long trouble-free service life for the products shown, regardless of the manufacturer.

Drive Data

Mounting attitude should be horizontal. See preceding page for vertical mount option. Consult your local Vickers representative if a different arrangement is required.

Direction of shaft rotation, viewed at the prime mover end, must be as indicated in the model designation on the pump. See "5" in Model Codes, page 6.

Drive arrangement should be by direct drive through a flexible coupling. Check pump installation drawing for concentricity and squareness tolerances.

Torque capability of shafts in basic (non-thru-drive) pumps is well in excess of that needed for operation at rated pressure and maximum displacement. Limitations for multiple pumps formed by PVH thru-drives as front-end sections are specified in the chart on page 18.

Moment of Inertia (Single Pump Rotating Group)

Model	Nm.sec^2	(lb.in.sec^2)
PVH057	0,0054	(0.0475)
PVH063	0,0054	(0.0447)
PVH074	0,0078	(0.0692)
PVH081	0,0073	(0.0643)
PVH098	0,0134	(0.1189)
PVH106	0,0123	(0.1086)
PVH131	0,0210	(0.1862)
PVH141	0,0210	(0.1856)

Cleanliness Codes For Petroleum Oil Usage

	System Pressure Level		
Product	**2000 psi**	**2000-3000 psi**	**3000+ psi**
Vane pumps, fixed	20/18/15	19/17/14	18/16/13
Vane pumps, variable	18/16/14	17/15/13	
Piston pumps, fixed	19/17/15	18/16/14	17/15/13
Piston pumps, variable	18/16/14	17/15/13	16/14/12
Directional valves	20/18/15	20/18/15	19/17/14
Proportional valves	17/15/12	17/15/12	15/13/11
Servo valves	16/14/11	16/14/11	15/13/10
Pressure/Flow controls	19/17/14	19/17/14	19/17/14
Cylinders	20/18/15	20/18/15	20/18/15
Vane motors	20/18/15	19/17/14	18/16/13
Axial piston motors	19/17/14	18/16/13	17/15/12
Radial piston motors	20/18/14	19/17/13	18/16/13

Weights, Ordering, Installation/Start-up

Weights in kg (lb)*

Pump Size	Basic Pump	Thru-drive Pump SAE "A"
PVH057	30–36	31-37
PVH063	(66-79)	(68-82)
PVH074	39-45	42-48
PVH081	(86-99)	(93-106)
PVH098	43-49	44-50
PVH106	(95-108)	(97-110)
PVH131	60-66	62-68
PVH141	(132-145)	(137-150)

*Approximate dry weights. Weight for a given model depends upon the type of pump control selected.

Ordering Procedure

Order PVH pumps by the full model designation. Pump displacement, mounting flange type, direction of rotation, pump configuration, shaft end type, shaft seals, pressure adjustment range, specific control functions, and torque limiter settings are all specified in the full model code.

Various Vickers® relief valves from Eaton are suitable for use with the "IC" compensator and must be ordered separately.

Examples include:

- DGMC2-3-AT-BT (plus DG4V-3-8C directional valve) for remotely and electrically controlled dual-pressure compensation, and standby no-flow pump operation in the load sensing mode.
- DGMC-3-PT-FW-30 crossline relief module (with DG4V3-8C directional valve) for electrical selection of dual pressure compensation.
- ECGF-02-9-21 proportional relief valve, with feedback, for remote control of pressure compensation.
- ECG-02-9-30 proportional relief valve for remote control of pressure compensation.
- DGMC-3-AT-BT (plus DG4V-3-0A directional valve) for remotely and electrically selected dual-pressure compensation.
- C175-F-20 (plus blanking plate DGMA-3-B-11 and tapping plate DGMA-T2-20-S) for remote control of pressure compensation.
- CVGC-3-S12 for non-remote control of pressure compensation.
- DGMC-3-PT-FW-30 crossline relief module (with blanking plate DGMA-3-B-11) for non-remote control of pressure compensation.

Contact your Vickers representative for additional information on the application and ordering of relief valves.

Installation and Start-up

The installation of PVH pumps must be in accord with the data on pages 16 and 27.

Before the pump is started, fill the case through the uppermost drain port with hydraulic fluid of the type to be used. The case drain line must be connected directly to the reservoir and terminate below the oil level.

If the pump has the vertical-mount option, attach a secondary drain line as noted on page 29.

Maximum continuous pressure at the case drain port must not exceed 0,5 bar (7 psi). For multiple pump arrangements that include non-PVH sections, the requirements of the non-PVH units must be considered.

Eaton
Hydraulics Business USA
14615 Lone Oak Road
Eden Prairie, MN 55344
USA
Tel: 952-937-9800
Fax: 952-294-7722
www.eaton.com/hydraulics

Eaton
Hydraulics Business Europe
Route de la Longeraie 7
1110 Morges
Switzerland
Tel: +41 (0) 21 811 4600
Fax: +41 (0) 21 811 4601

Eaton
Hydraulics Group Asia Pacific
Eaton Building
No.7 Lane 280 Linhong Road
Changning District, Shanghai
200335 China
Tel: (+86 21) 5200 0099
Fax: (+86 21) 2230 7240

Powering Business Worldwide

© 2013 Eaton
All Rights Reserved
Printed in USA
Document No. V-PUPI-TM008-E1
October 2013