P1/PD Series
Medium Pressure Axial Piston Pumps

Variable Displacement
Catalog HY28-2665-01/P1/EN
Effective: August 2021 | Replaces April 2021

Parker

ENGINEERING YOUR SUCCESS.

Contents

General Information & Technical Specs 3
Ordering Information 4
Shaft Technical Data 6
Control Options 7
Performance Data
- Typical Pump Outlet Flow 14
- Typical Shaft Input Power 16
- Typical Shaft Bearing Life 19
- Typical Noise Characteristics 21

Dimensional Data
- P1/PD 018 25
- P1/PD 028 29
- P1/PD 045 33
- P1/PD 060 37
- P1/PD 075 & 085 42
- P1/PD 100 47
- P1/PD 140 52
- Controls 57

Installation Information 63
Conversions & Formulas 64
Offer of Sale 66
Content Index 67

WARNING - USER RESPONSIBILITY

FAILURE OR IMPROPER SELECTION OR IMPROPER USE OF THE PRODUCTS DESCRIBED HEREIN OR RELATED ITEMS CAN CAUSE DEATH, PERSONAL INJURY AND PROPERTY DAMAGE.

This document and other information from Parker-Hannifin Corporation, its subsidiaries and authorized distributors provide product or system options for further investigation by users having technical expertise.

The user, through its own analysis and testing, is solely responsible for making the final selection of the system and components and assuring that all performance, endurance, maintenance, safety and warning requirements of the application are met. The user must analyze all aspects of the application, follow applicable industry standards, and follow the information concerning the product in the current product catalog and in any other materials provided from Parker or its subsidiaries or authorized distributors.

To the extent that Parker or its subsidiaries or authorized distributors provide component or system options based upon data or specifications provided by the user, the user is responsible for determining that such data and specifications are suitable and sufficient for all applications and reasonably foreseeable uses of the components or systems.

OFFER OF SALE

The items described in this document are hereby offered for sale by Parker-Hannifin Corporation, its subsidiaries or its authorized distributor. This offer and its acceptance are governed by the provisions stated in the detailed "Offer of Sale" elsewhere in this document.

Parker Hannifin Corporation
Hydraulic Pump and Power Systems Division
United States

Description

- Variable displacement, axial piston pump for open-circuit applications
- Continuous operation at pressures up to 280 bar
- High drive speed models for mobile markets and low noise models for industrial markets
- Quiet and efficient control capability
- Cam bearing design

Benefits

- Compact overall package size
- High power density
- Many different standard control options
- Modular controls for easy conversions
- High operating efficiency for lower power consumption and reduced heat generation
- Elastomer seals that eliminate gaskets and external leakage
- Simple hydraulic controls with “no-leak” adjustments
- Fast and stable compensator response
- SAE and ISO standard mounting flanges and ports
- Long life, roller shaft bearings
- Long life, low friction, hydrostatically balanced swash plate saddle bearings
- Full power through-drive capability
- Multiple case drain ports for various mounting orientations
- Optional minimum and maximum displacement adjustments
- Easy to service

Technical Data

Model	P1/PD 018	P1/PD 028	P1/PD 045	P1/PD 060	P1/PD 075	P1/PD 085	P1/PD 100	P1/PD 140
Maximum Displacement, cm^3/rev cu.in./rev	18 1.10	28 1.71	45 2.75	60 3.66	75 4.58	85 5.19	100 6.01	140 8.54
Outlet Pressure – Continuous	280 bar (4060 psi)					250 bar (3600 psi)	280 bar (4060 psi)	
Intermittent*	320 bar (4640 psi)					300 bar (4350 psi)	320 bar (4640 psi)	
Peak	350 bar (5075 psi)					320 bar (4600 psi)	350 bar (5075 psi)	
P1 Maximum Speed (1.3 bar abs inlet), rpm	3500	3400	3100	2800	2700	2700	2500	2400
P1 (1.0 bar abs inlet), rpm	3300	3200	2800	2500	2400	2400	2250	2100
P1 (0.8 bar abs inlet), rpm	2900	2900	2400	2200	2100	2100	1900	1800
PD Maximum Speed (1.0 bar abs inlet), rpm	1800							
PD (0.8 bar abs inlet), rpm	1800							
Minimum Speed, rpm	600							
Inlet Pressure – Maximum	11 bar absolute (160 psi)							
Rated	1.0 bar absolute (14.5 psi)							
Minimum	0.8 bar absolute (11.6 psi)							
Case Pressure – Peak, bar	4.0 bar absolute (58 psi) and less than 0.5 bar (7.3 psi) above inlet pressure							
Rated, bar	2.0 bar absolute (29 psi) and less than 0.5 bar (7.3 psi) above inlet pressure							
Fluid Temperature Range, °C °F	-40 to +95 -40 to +203							
Fluid Viscosity – Rated, cSt	7 to 160							
Optimum Range, cSt	14-50 cSt.							
Max. Intermittent, cSt	5000 (for cold starting)							
Min. Intermittent, cSt	5							
Fluid Contamination – Rated, ISO	20/18/14							
Weight – End Port, kg (lb)	13.4 (29.5)	17.7 (39.0)	23 (50)	29 (64)	30 (66)	30 (66)	51 (112)	66 (145)
Side Port, kg (lb)	14.2 (31.3)	18.1 (40.0)	24 (52)	30 (67)	31 (68)	31 (68)	53 (117)	67 (147)
Thru-Drive, kg (lb)	15 (34)	22 (48)	27 (59)	34 (75)	35 (77)	35 (77)	55 (121)	82 (180)
Moment of Inertia kg·mm^2	760	1555	3208	4548	5041	5041	12027	21400
Moment of Inertia Thru-Drive, kg·mm^2	793	1618	3268	4687	5207	5207	12402	22343

*Intermittent is defined as less than 10% of operation time, not exceeding 20 successive seconds.

P1/PD Model Ordering Code

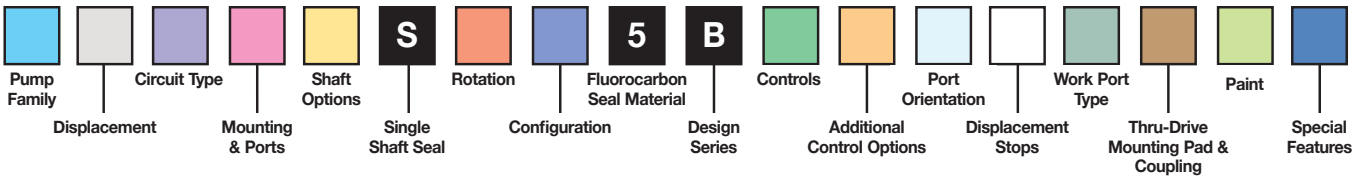

Pump Family	
P1	Mobile
PD	Industrial

Displacement	
018	18cc/rev
028	28cc/rev
045	45cc/rev
060	60cc/rev
075	75cc/rev
085	85cc/rev
100	100cc/rev
140	140cc/rev

Circuit Type	
P	Open Circuit - One Side of Center
X	Open Circuit - Overcenter (45-75, 100-140cc with P, T, S, U controls only)

Mounting & Ports	
S	SAE mount; SAE work & aux ports
A	SAE mount; Metric work ports; BSPP aux ports
M	ISO mount; Metric work & aux ports
B	ISO mount; Metric work ports; BSPP aux ports
C	2-bolt SAE C mount; SAE work & aux ports (60-85cc only)
D	2-bolt SAE C mount; metric work ports; BSPP aux ports (60-85cc only)
J	2-bolt SAE-B mount; SAE work & aux ports (60cc only)
K	2-bolt SAE-B mount; Metric work ports; BSPP aux ports (60cc only)

Shaft Options	
01	SAE Spline
02	SAE Keyed
04	ISO Keyed
06[1]	SAE Spline (18 & 100cc only)
08	SAE-B 13T Spline (28 & 45cc only)
09	SAE-BB 15T Spline (60cc only)
10	SAE-B 13T Spline (60cc only; Not with thru drive)

[1] 18cc de-rated to 210 bar

Rotation	
R	Clockwise
L	Counterclockwise

Configuration	
M	Mobile (P1)
S	Industrial (PD)
U[2]	Universal (45-140cc only)

[2] Comes with torque limiter ports drilled in the housing

Controls	
C0	Pressure Limiter
L0	Load sensing & pressure limiter
L2	Load sensing with bleed & pressure limiter
AM	Remote pressure limiter
AN	Remote pressure limiter with D03 interface
AE	Prop. Pressure limiter (Min default - 12VDC)
AF	Prop. Pressure limiter (Min default - 24VDC)
AG[3]	Prop. Pressure limiter (Max default - 24VDC)
AH[3]	Prop. Pressure limiter (Max default - 12VDC)
Electronic Displacement Controls	
P0	Min default; No Pmax override; 12 VDC
PM	Min default; No Pmax override; 24 VDC
T0	Max default; No Pmax override; 12 VDC
TM	Max default; No Pmax override; 24 VDC
S0	Min default; Pmax override; 12 VDC
SM	Min default; Pmax override; 24 VDC
U0	Max default; Pmax override; 12 VDC
UM	Max default; Pmax override; 24 VDC

[3] Requires application review. Consult factory.

Additional Control Options	
0	No other options
2	Cam sensor (mandatory with P, T, S, U controls)
3[4]	Unload Valve - 12VDC (C0 or L0 control only)
6[4]	Unload Valve - 24VDC (C0 or L0 control only)
4	210 bar pressure limit (AG or AH control only)
7	280 bar pressure limit (AG or AH control only)
T	Torque Limiter (45-140cc only; L0, AM, AN control only)

[4] Available on 28-140cc only

Port Orientation	
E	End Ports
S	Side Ports (60-140cc only)
R	Side Ports with ripple chamber (18-45cc only)
T	Side Ports with thru-drive

Displacement Stops[5]	
0	None
1	Adjustable maximum stop
2	Adjustable minimum stop
3	Adjustable maximum & minimum stop

[5] Not standard with thru drive. Contact factory for approval.

Work Port Type	
0	Flanged (Not with 18cc "E" or "R" ports)
2[6]	Threaded (18-60cc only)

[6] On 60cc, only with SAE end ports

Thru-Drive Designation Description	
0	None
A	SAE 82-2 (A), 9T coupling
H	SAE 82-2 (A), 11T coupling
B	SAE 101-2 (B), 13T coupling (28-140cc only)
Q	SAE 101-2 (B), 15T coupling (28-140cc only)
C	SAE 127-4 (C), 14T coupling (60cc only) SAE 127-2/4 (C), 14T coupling (75-140cc only)
N	SAE 127-4 (C), 17T coupling (100 & 140cc only)
D	SAE 152-4 (D), 13T coupling (140cc only)

Paint	
00	No Paint
PB	Black Paint

Special Features	
00	Standard
M2	Special Designation

Parker Hannifin Corporation
Hydraulic Pump and Power Systems Division
United States

Mounting Designation Descriptions

Code	Standard	18	28	45	60	75 & 85	100	140
S & A	SAE J744	SAE-A 2-Bolt	SAE-B 2-Bolt	SAE-B 2-Bolt	SAE-C 4-Bolt	SAE-C 4-Bolt	SAE-C 4-Bolt	SAE-D 4-Bolt
M & B	ISO 3019/2	ISO 80mm 2-Bolt	ISO 100mm 2-Bolt	ISO 100mm 2-Bolt	ISO 125mm 4-Bolt	ISO 125mm 4-Bolt	ISO 125mm 4-Bolt	ISO 180mm 4-Bolt
C & D	SAE J744	N/A	N/A	N/A	SAE-C 2-Bolt	SAE-C 2-Bolt	N/A	N/A
J & K	SAE J744	N/A	N/A	N/A	SAE-B 2-Bolt	N/A	N/A	N/A

Shaft Descriptions

Code	18	28	45	60	75 & 85	100	140
01	SAE 11T spline	SAE-BB 15T spline	SAE-BB 15T spline	SAE-C 14T spline	SAE-C 14T spline	SAE-CC 17T spline	SAE-D 13T spline
02	SAE 19mm keyed	SAE-BB keyed	SAE-BB keyed	SAE-C keyed	SAE-C keyed	SAE-CC keyed	SAE-D keyed
04	ISO 20mm keyed	ISO 25mm keyed	ISO 25mm keyed	ISO 32mm keyed	ISO 32mm keyed	ISO 40mm keyed	DIN 50mm keyed
06	SAE-A 9T spline	N/A	N/A	N/A	N/A	SAE-C 14T spline	N/A
08	N/A	SAE-B 13T spline	SAE-B 13T spline	N/A	N/A	N/A	N/A
09	N/A	N/A	N/A	SAE-BB 15T spline	N/A	N/A	N/A
10	N/A	N/A	N/A	SAE-B 13T spline	N/A	N/A	N/A

Maximum Flange Moment Ratings

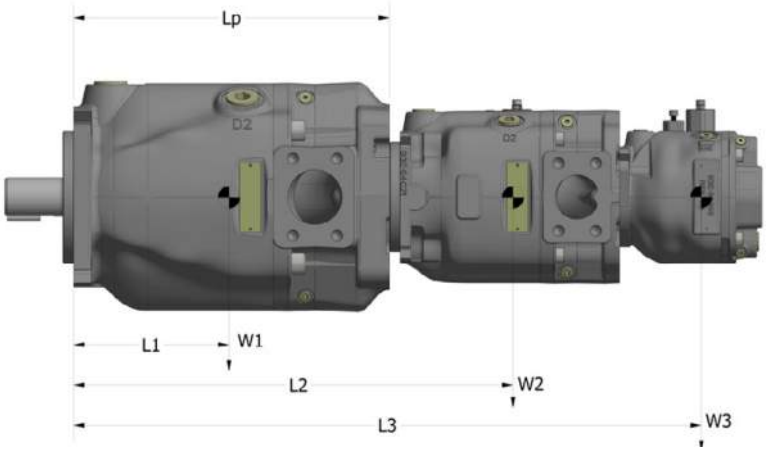

Moment M = (L1*W1+L2*W2+L3*W3...) ÷ 102

		P1/PD Displacement							
Measurement	**Units**	**18**	**28**	**45**	**60**	**75**	**85**	**100**	**140**
Maximum Static Moment	**Nm**	500	650	1000	1200	1600	1600	2200	3200
Maximum Dynamic Moment (at 10g acceleration)	**Nm**	50	65	100	120	160	160	220	320
Distance L1 (no thru drive)	**mm**	73	93	107	110	119	119	154	154
Distance L1 (thru drive)	**mm**	104	113	115	123	134	134	179	185
Distance Lp	**mm**	199	233	229	253	264	264	340	364

Shaft Torque Ratings

		Units	18 (1.1)	28 (1.71)	45 (2.75)	60 (3.66)	75 (4.58)	85 (5.19)	100 (6.1)	140 (8.54)
Maximum Input shaft torque	01	Nm	134	337	337	641	641	641	1217	1701
		ft.lbs	99	249	249	473	473	473	898	1255
	02	Nm	130	357	357	559	559	559	1134	1732
		ft.lbs	96	264	264	413	413	413	837	1278
	04	Nm	113	337	337	576	576	576	1157	1708
		ft.lbs	84	249	249	425	425	425	854	1260
	06	Nm	58	N/A	N/A	N/A	N/A	N/A	641	N/A
		ft.lbs	43						473	
	08	Nm	N/A	209	209	N/A	N/A	N/A	N/A	N/A
		ft.lbs		155	155					
	09	Nm	N/A	N/A	N/A	337	N/A	N/A	N/A	N/A
		ft.lbs				249				
	10	Nm	N/A	N/A	N/A	209	N/A	N/A	N/A	N/A
		ft.lbs				155				
Maximum through-drive shaft torque		Nm	134	210	293	318	329	329	538	760
		ft.lbs	99	155	217	235	243	243	397	561

Radial and Axial Shaft Load Ratings

Radial Load Diagram

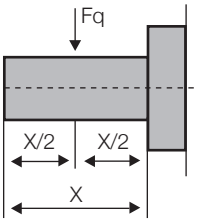

Axial Load Diagram

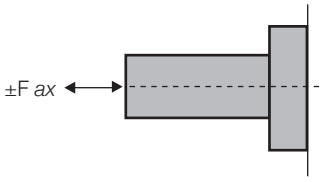

Maximum Allowable Shaft Load									
		018	028	045	060	075	085	100	140
Radial Force (At X/2)	N	700	1,000	1,500	1,800	1,900	1,900	2,300	2,600
	lbf	160	229	343	411	434	434	526	594
Axial Force	N	1,900	1,900	2,500	2,300	2,300	2,300	3,100	4,200
	lbf	434	434	571	526	526	526	709	960

Shaft Rotational Stiffness

Shaft Designation	Units	018		028		045		060		075/085		100		140	
		NRD	RD	NRD	RD	NRD	RD	NRD	RD	NRD	RD	NRD	RD	NRD	RD
01	ft-lb/Rad	4,332	3,475	7,712	6,458	11,681	10,540	18,198	15,397	20,615	16,838	31,080	25,479	47,819	43,970
	Nm/Rad	5,848	4,691	10,411	8,718	15,769	14,229	24,567	20,786	27,830	22,731	41,958	34,397	64,556	59,360
02	ft-lb/Rad	5,082	4,363	7,317	7,293	11,040	6,179	17,828	14,905	16,061	15,661	28,607	23,793	48,994	40,954
	Nm/Rad	6,861	5,890	9,878	9,846	14,904	8,342	24,068	20,122	21,682	21,142	38,619	32,121	66,142	55,288
04	ft-lb/Rad	4,468	3,903	7,011	5,958	9,362	8,715	16,771	14,006	14,994	14,646	25,529	21,625	53,685	44,181
	Nm/Rad	6,032	5,269	9,465	8,043	12,639	11,765	22,641	18,908	20,242	19,772	34,464	29,194	72,475	59,644
06	ft-lb/Rad	2,972	2,846	N/A		N/A		N/A		N/A		26,806	22,533	N/A	
	Nm/Rad	4,012	3,842									36,188	30,420		
08	ft-lb/Rad	5,699	5,044	7,320	6,180	10,124	9,255	N/A		N/A		N/A		N/A	
	Nm/Rad	7,694	6,809	9,882	8,343	13,667	12,494								
09	ft-lb/Rad	N/A		N/A		N/A		16,615	13,370	N/A		N/A		N/A	
	Nm/Rad							22,430	18,050						
10	ft-lb/Rad	N/A		N/A		N/A		11,696	10,472	N/A		N/A		N/A	
	Nm/Rad							15,790	14,137						

NRD = No rear thru drive; RD = Rear thru drive

Parker Hannifin Corporation
Hydraulic Pump and Power Systems Division
United States

Control Option “C”

Pressure Limiter

Adjustment Range = 26-280 bar (380-4060 psi)

The "C0" pressure limiter control is used to limit the maximum system pressure. The control acts such that full pump displacement is achieved unless the system valve restricts the output flow or the load pressure reaches the maximum setting of the control. If pump flow is restricted by the system valve, the pump will provide only the flow demanded, but at the maximum pressure setting of the compensator control. If the outlet flow is completely blocked, the pump will destroke to zero displacement and maintain the pressure at the setting of the compensator spring.

Control Option “L”

Load Sensing and Pressure Limiter

Pressure Limiter Adjustment Range = 26-280 bar (380-4060 psi)
Differential Adjustment Range = 10-40 bar (150-580 psi)

The "L0" and "L2" controls feature load sensing and maximum pressure compensation. A load sense line that comes from downstream of the main system throttling valve is connected to the "X" port on the control. This control matches pump flow and pressure to system demands by maintaining a constant pressure drop across the main system throttling valve, thus reducing horsepower losses. The pump automatically adjusts for changes in drive speed and load pressures. Choose the "L2" option if bleeding the load sense line at the pump is desired.

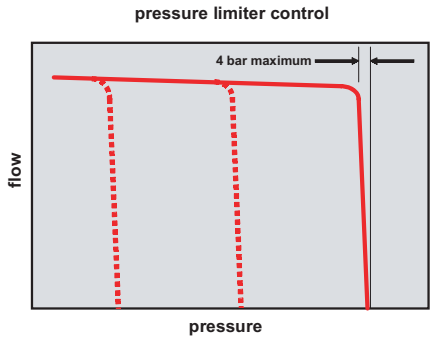

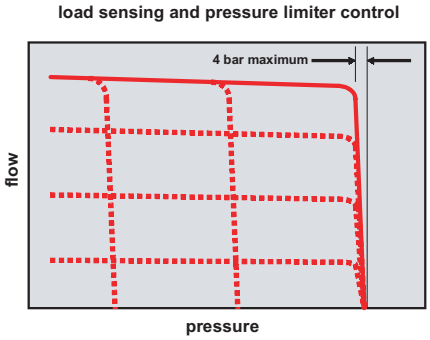

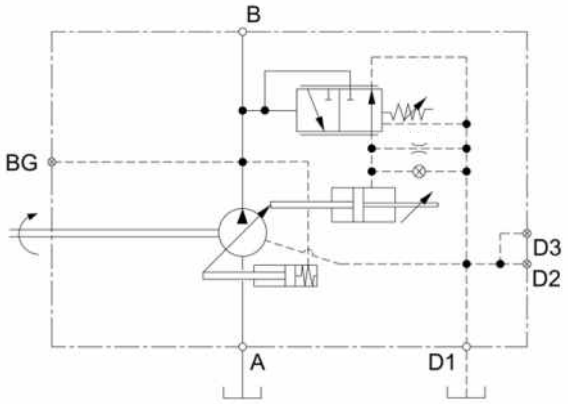

C0 Schematic

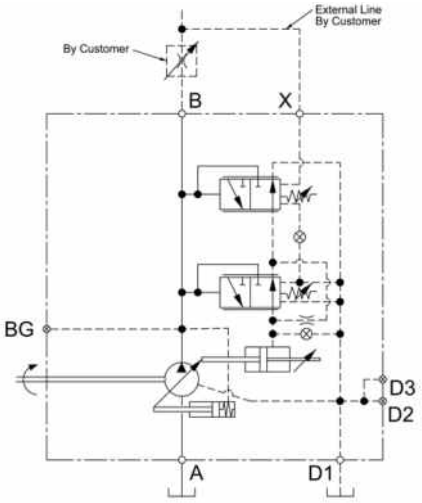

L0 Schematic

		Typical Control Response Time (ms)						
Control Description	**Pump Operating Condition**	**018**	**028**	**045**	**060**	**075/085**	**100**	**140**
"C" Pressure Limiter	Maximum Displacement to Zero	25	25	25	37	21	26	30
	Zero Displacement to Maximum	80	80	106	119	89	108	125
“L” Load Sensing	Maximum Displacement to Zero	40	40	30	54	40	43	45
	Zero Displacement to Maximum	70	70	120	186	97	189	280

* Based on NFPA testing standards

Control Options “AM”
Remote Operated Pressure Limiter

The "AM" control allows the pump pressure compensator setting to be adjusted from a remote relief valve that is connected to the "X" port on the control. The control acts such that full pump displacement is achieved unless the system valve restricts the output flow or the load pressure reaches the maximum setting of the control. If pump flow is restricted by the system valve, the pump will provide only the flow demanded, but at the maximum pressure setting of the compensator control. If the outlet flow is completely blocked, the pump will destroke to zero displacement and maintain the pressure at the setting of the remote relief valve.

Control Option “AN”
Pilot Operated Control with ISO 4401 NG6 Interface for Customer Added Pressure Limiter

The "AN" control is a standard pressure compensator, but with a NG6 (D03) valve interface. It is the same as the "AM" control, but with the addition of an adapter block mounted between the pump housing and control to provide the NG6 (D03) interface. This allows a directional valve or proportional relief valve to be mounted directly on the pump to achieve a variety of pressure control circuits.

Caution: Pumps shipped with the “AN” control need to have a valve mounted to the NG6 interface for operation. This is not a functional control as shipped.

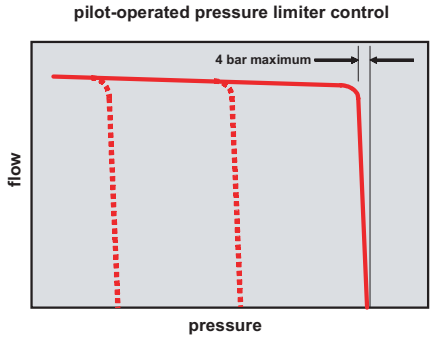

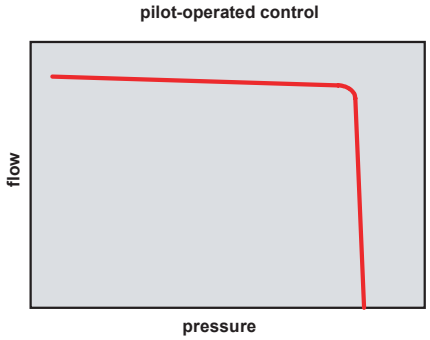

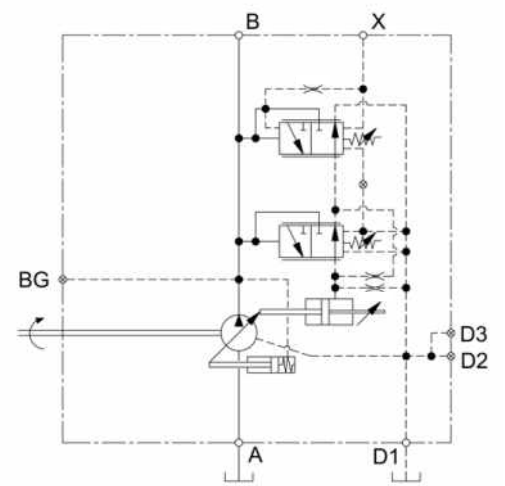

AM Schematic

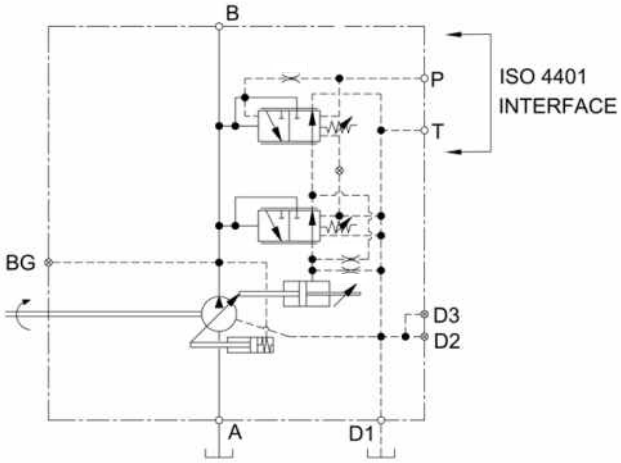

AN Schematic

		Typical Control Response Time (ms)						
Control Description	**Pump Operating Condition**	**018**	**028**	**045**	**060**	**075/085**	**100**	**140**
“A” Pilot Operated Control	Maximum Displacement to Zero	25	25	46	43	37	39	40
	Zero Displacement to Maximum	80	80	131	125	115	123	130

* Based on NFPA testing standards

Control Options “AMT,” “ANT,” and “L0T”

Torque Limiting Controls: (45-140cc only)

AMT = Remote pressure limiting with torque limiting
ANT = Pilot operated pressure limiting with torque limiting
L0T = Load sense & pressure limiting with torque limiting

These controls provide the benefit of pressure limiting control, plus the ability to limit the input torque when the power available from the prime mover is limited; or when the application power demand has both high flow/low pressure and low flow/high pressure operating conditions.

“AMT” & "ANT" Control

The "AMT" and "ANT" combine the pilot pressure limiter function with a torque limiting function. On the "AMT" control, the pressure limiter function is controlled remotely by connecting an external relief valve to the "X" port. On the "ANT" control, the pilot relief valve is mounted directly on the pump via the NG6 interface on the control block. Once the torque limiter setting is reached, the pump will destroke as pressure continues to rise in order to maintain the same input torque. Once the pressure limiter setting is reached, the pump will destroke to limit the system pressure.
Caution: The ANT control will not function without a valve mounted on the NG6 interface.

"L0T" Control

The "L0T" combines the functions of a pressure limiter, load sense and torque limiter control. The pressure limiter function limits the maximum pump outlet pressure. The load sense control function requires the "X" port to be connected to the highest load pressure via a load sense signal line. The control will match pump output flow and pressure to the system demand , thus minimizing horsepower losses. The pump will operate in a load sense mode until the torque limiter setting is reached, and then the pump will maintain the input torque at the pre-selected setting. If the system pressure reaches the pressure compensator setting, then the pump flow will be lowered to the level needed to maintain the maximum pressure setting.

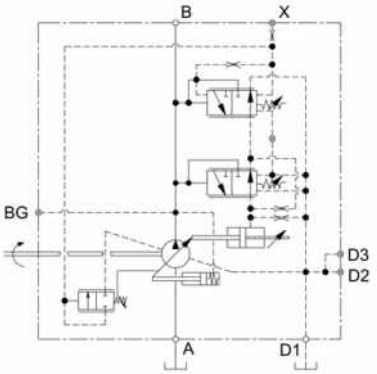

AMT Torque Limiter

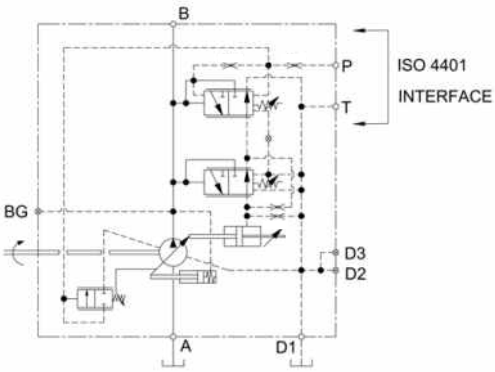

ANT Torque Limiter

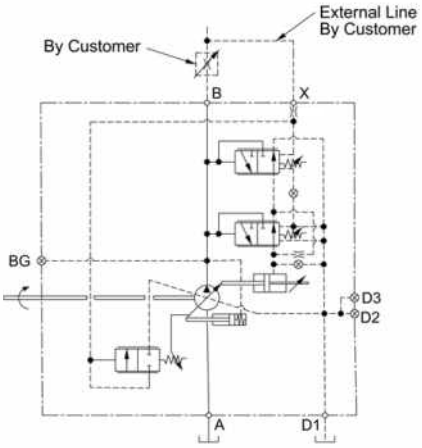

L0T Torque Limiter

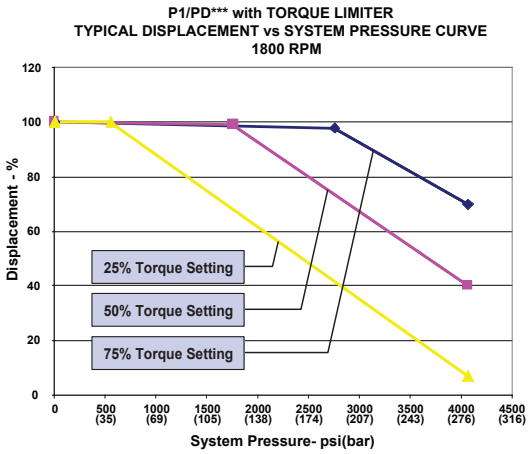

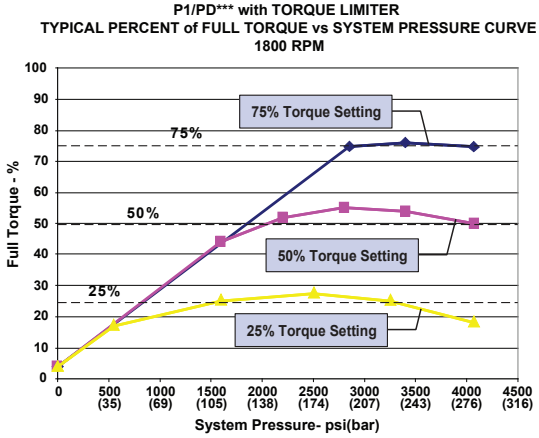

Control Options “AE” and “AF”

Electronic Proportional Pressure Limiting with Mechanical Pressure Limiter
Minimum Pressure Default
AE = 12 VDC Solenoid
AF = 24 VDC Solenoid

This control is the same as the AN control, but with the proportional relief valve included. It allows the pump pressure compensator setting to be adjusted by an on-board 4VP0150G24B1C1 (24V) or RE06M35W2N1KWXG087 (12V) proportional, electronic relief valve. The control acts such that full pump displacement is achieved unless the system pressure reaches the setting of the proportional relief valve or the mechanical pressure limiter. If pump flow is restricted by the system, the pump will provide only the flow demanded, but at the pressure setting of the proportional or mechanical control. If the outlet flow is completely blocked, the pump will destroke to zero displacement and maintain the pressure at the setting of the control.

The proportional relief valve defaults to minimum displacement, so if no current is going to relief valve, then the pump goes to minimum displacement at a low pressure stand-by condition. Furthermore, as current to the proportional relief valve increases, the pressure setting of proportional relief valve increases.

Note: The pressure relief valve has a command range up to 350 bar, but P1/PD pump is rated to 280 bar continuous pressure.

The following are options to drive the proportional valve on the AE or AF pump:

Parker Part#	Description
027-22071-0	Dual Driver Module (12/24V)
027-22067-0	Plug-Top-Driver 12V (0-10V command)
027-22066-0	Plug-Top-Driver 24V (0-10V command)

Note: Consult Factory for more driver options and information.

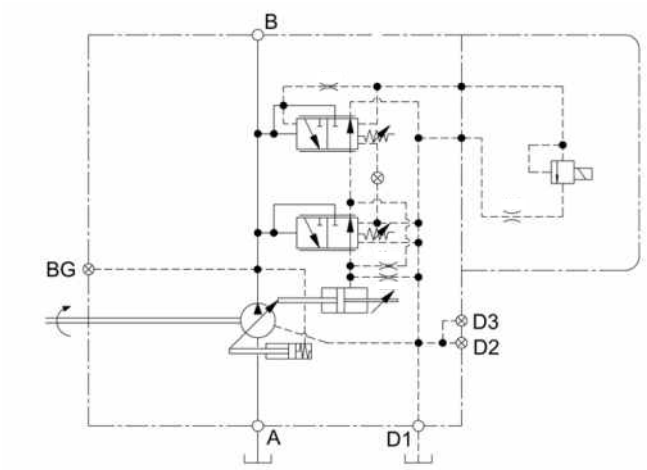

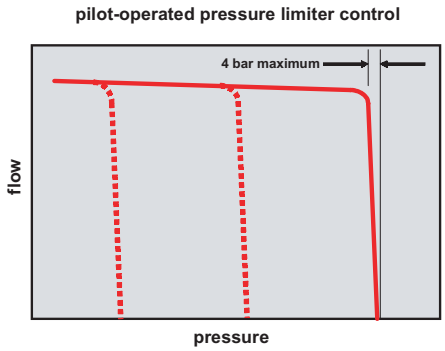

Electric Characteristics		
	RE06	4VP01
Voltage	12VDC	24VDC
Coil Resistance	4 Ohms	25 Ohms
Max current	2.3 A	800mA
Connector	DIN 43650	Plug-in per ISO 4400
Protection Class	IP65	IP65

Pressure vs. Input Current

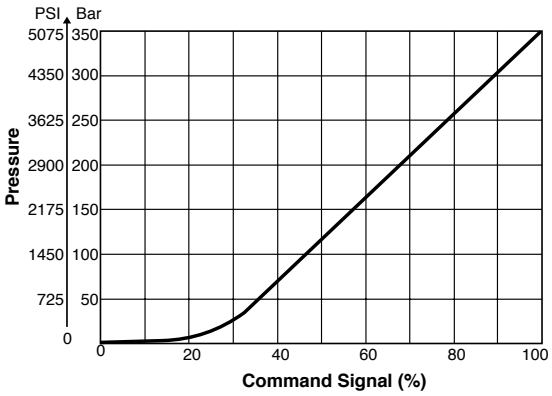

Parker Hannifin Corporation
Hydraulic Pump and Power Systems Division
United States

Control Options “C03,” “C06,” “L03,” “L06”

Electronic Unload/Cold Start

C03 = Pressure limiting with 12VDC unload valve
C06 = Pressure limiting with 24VDC unload valve
L03 = Load sense & pressure limiting with 12VDC unload valve
L06 = Load sense & pressure limiting with 24VDC unload valve

This control contains a cartridge valve that is integrated into the pump control to unload the pump into a low pressure stand-by condition in order to reduce the torque required to turn the pump. This control is often used in cold start conditions when the hydraulic fluid is very cold and viscous. The high fluid viscosity causes the pump to require more torque when initially starting, so this option can be used to de-stroke the pump upon start-up in order to reduce the torque load on the engine to prevent it from stalling.

“LOADED” CONDITION

“C03” & “C06” Controls - Pressure limiting with unload function

When the unload valve is in the spring position (de-energized), the pump is “loaded”. This means the valve sends system pressure to the spring side of the differential spool, so that pressure on both sides of that spool is equal. Therefore, the spring setting prevents the differential spool from moving, so only the Pmax spool is active. Thus the control behaves just like a standard pressure limiting control.

“L03” & “L06” Controls - Load sensing & pressure limiting with unload function

When the unload valve is in the spring position (de-energized), the pump is “loaded”. The load sense function requires the signal port be connected to load pressure, and the valve sends the load pressure to the spring side of the differential spool, so that a pressure differential is created between the spring side of the spool and the system side allowing the control to function like a standard load sensing control.

“UNLOADED” CONDITION

When the unload valve is in the energizes, the pump is “unloaded”. This means the valve dumps the pressure on the spring side of the differential spool, activating that spool which sends pressure to the control piston of the pump and allows the pump to de-stroke into a low pressure stand-by condition.

C0* Pressure Compensator Control with Unloading Valve

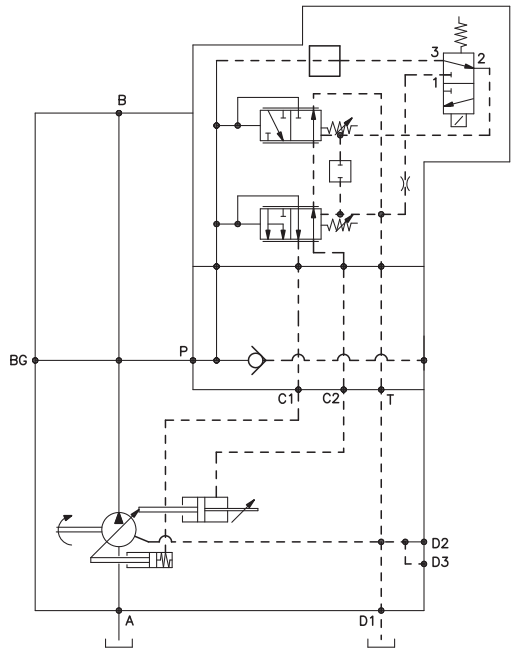

L0* Load Sense Control with Unloading Valve

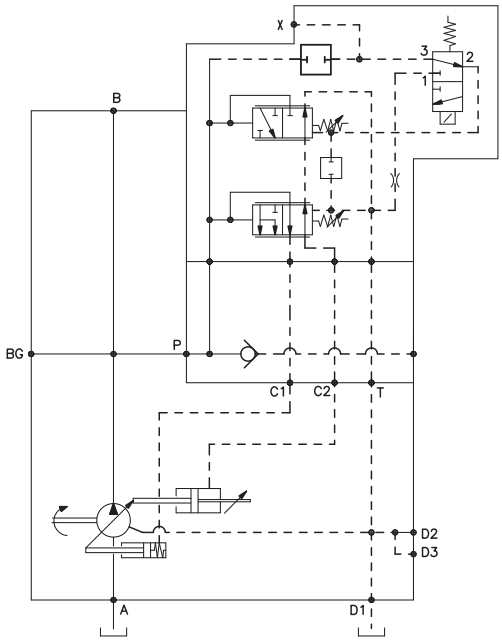

Control Options “AG” and “AH”

Electronic Proportional Pressure Limiting with Mechanical Pressure Limiter
Full Pressure Default
AG = 24 VDC
AH = 12 VDC

This control contains a Parker AP02B2YR35ALV proportional electronic pressure relief cartridge valve and mechanical pressure limiter that are integrated into the pump control to limit the maximum pressure of the pump either electronically or mechanically.

The control acts such that full pump displacement is achieved until the system pressure reaches the setting of the proportional relief or mechanical pressure limiter. If pump flow is restricted by the system, the pump will provide only the flow demanded, but at the pressure of the control setting. If the outlet flow is blocked, the pump will de-stroke to minimum displacement and maintain the pressure of the control setting.

The proportional relief valve defaults to maximum displacement, so if no current is going to the valve then the pump goes to full displacement until the pressure setting of the mechanical pressure limiter is reached. Furthermore, as current to the proportional relief valve is increased, the pressure setting of the proportional relief decreases. This type of can is often used in fan drive applications so that maximum cooling is achieved in the event of control signal loss.

Note: For the "A*7" option, the pressure relief valve has a command range up to 350 bar, but P1/PD pump is rated to 280 bar continuous pressure.

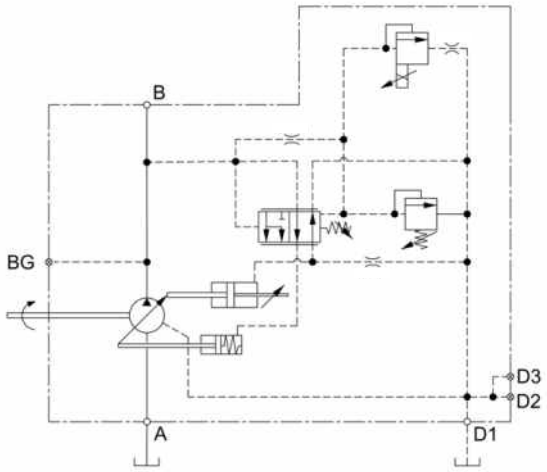

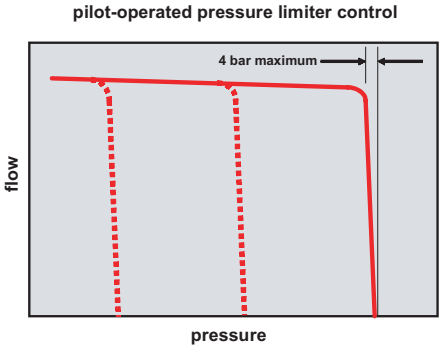

Electric Characteristics	
Coil Power	28 W*
Coil Resistance	5.1 Ohms (12 VDC) 20.6 Ohms (24 VDC)
Max current	2.33 A (12 VDC) 1.17 A (24 VDC)
PWM Signal	100-250 Hz (recommended)
Hysteresis	< 10%
Connection	Deutsch DT04-2P (IP 67)

*18 W coils available on request

A*7 Pressure vs. Input Current

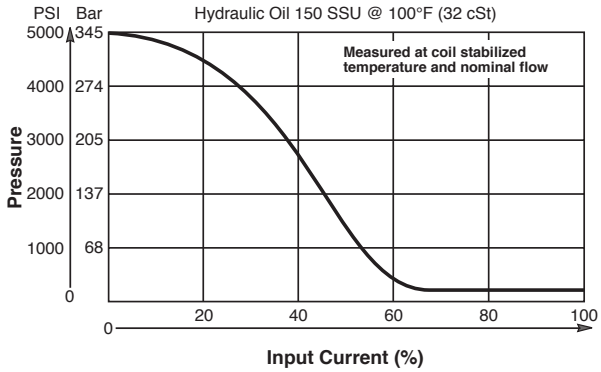

Parker Hannifin Corporation
Hydraulic Pump and Power Systems Division
United States

Control Options "P," "T," "S," "U"

Electronic Proportional Displacement & Pressure Limiting

P = Min displacement default*
T = Max displacement default*
S = Min displacement default and hydromechanical pressure limiter
U = Max displacement default and hydromechanical pressure limiter

* Pumps without pressure limiter should be designed in a circuit with other means of pressure limitation.

The control uses the D1FB electronic proportional valve from Parker's Hydraulic Valve Division to provide the precise flow specified per a displacement input command and maintain that flow level until a new displacement command level is received, or until the pressure command overrides to limit system pressure.

The holding current can vary from pump to pump, but is typically between 1.3-1.6 Amps for the 12V valve and 700-800 mA for the 24V valve.

A minimum of 25 bar servo pressure is required to control the pump. To control the pump at system pressure below 25 bar, either a sequence valve in the pressure line or an external servo source is required. Without adequate servo pressure, the pump is biased on stroke.

The mechanical pressure limiter will override the electronic inputs and limit pump outlet pressure to the preset level.

Using electronic control, the pump can be used in overcenter condition. (Energy recovery is one example of application for this.)

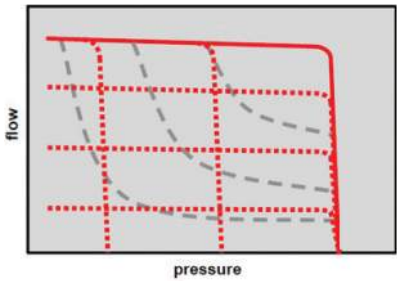

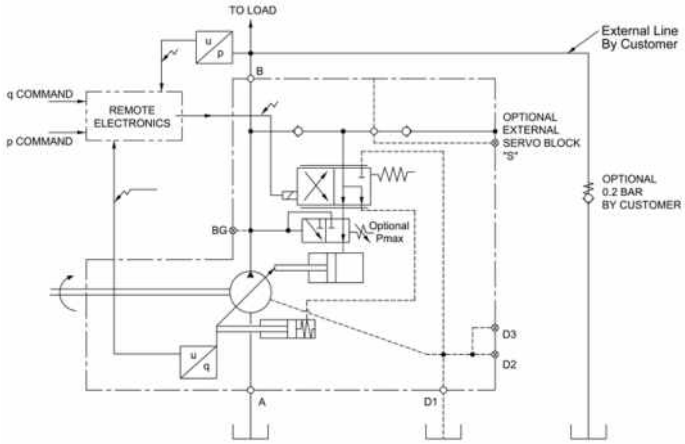

"S" Control Schematic

Electronic Proportional Valve Information		
Parameter	12 VDC	24 VDC
Resistance @ 20 C	4.4 Ohm	18.6 Ohm
Max Current	2.7 A	1.3 A
PWM Signal	100-250 Hz	
Typical Hysteresis*	<2%	
Connector	Deutsch DT04-2P	
Protection Class	IP66	

* Good results found with superimposed dither amplitude of +/- 200 mA for 12V valve and +/- 100 mA for 24V valve

Typical Control Response Times

	Response time (ms)						
Displacement (cc)	**18**	**28**	**45**	**60**	**75/85**	**100**	**140**
Max to zero	40	40	43	63	96	101	109
Zero to max	35	35	36	52	72	77	84

Displacement Sensor Wiring

DT04-3P Deutsch Connector		
Wire color	**Pin #**	**Signal**
Red	A	+5VDC
Black	B	0VDC
Blue	C	0 to 5VDC

For CW:
Full stroke = 0.56VDC
Zero stroke = 2.5VDC
100% overcenter = 4.44VDC

For CCW:
Full stroke = 4.44VDC
Zero stroke = 2.5VDC
100% overcenter = 0.56VDC

P1/PD Series Typical Pump Outlet Flow

PD Maximum Speed Rating = 1800 rpm

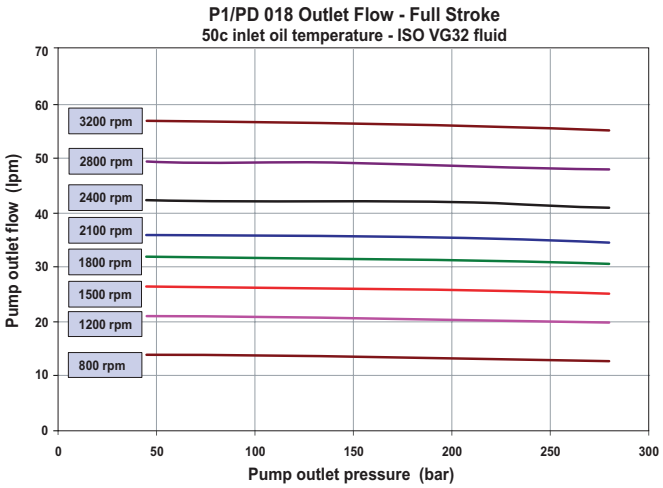

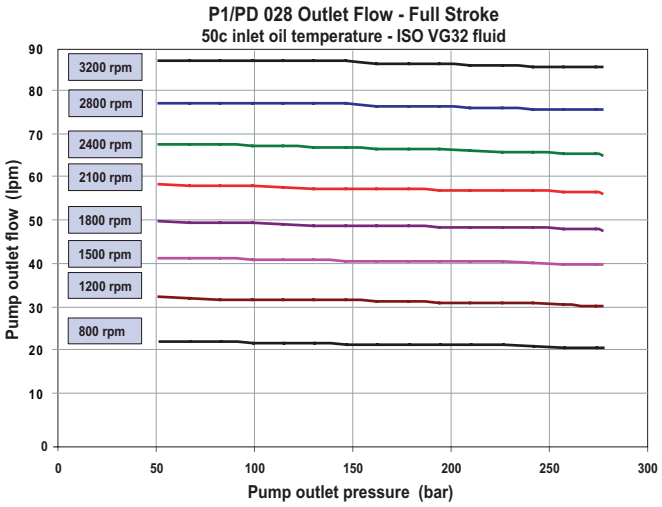

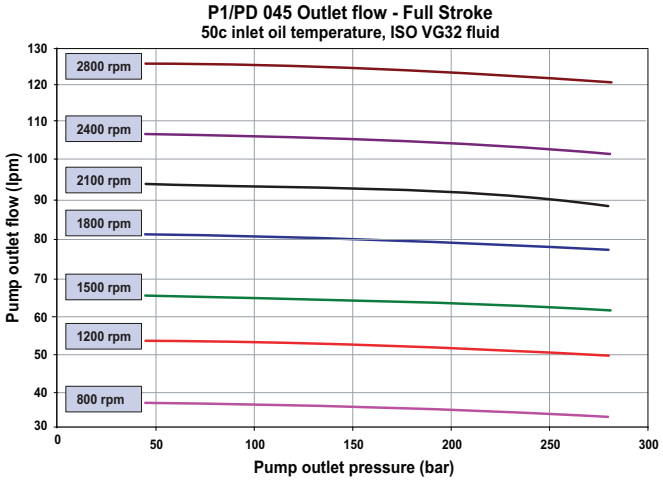

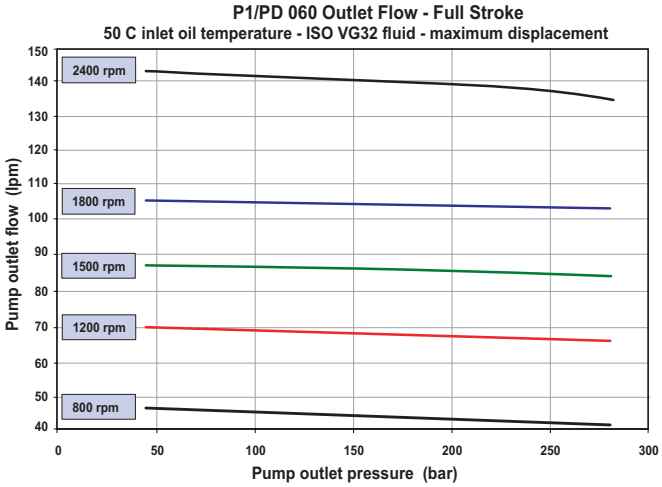

P1/PD Series Typical Pump Outlet Flow

PD Maximum Speed Rating = 1800 rpm

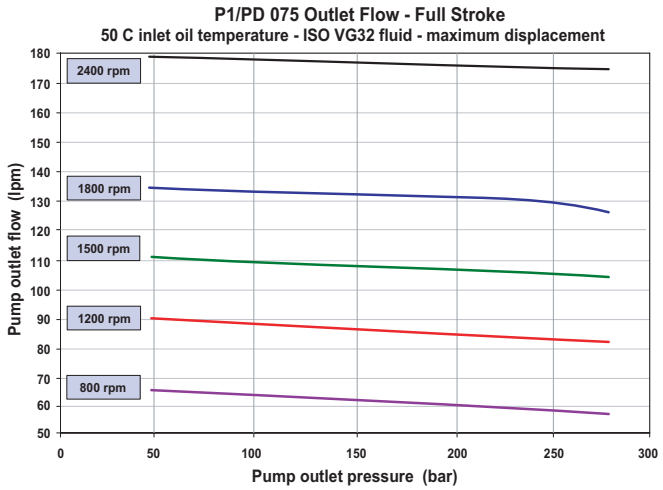

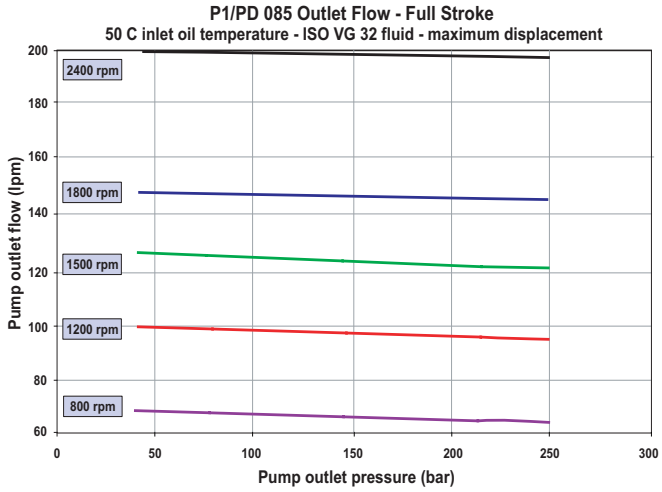

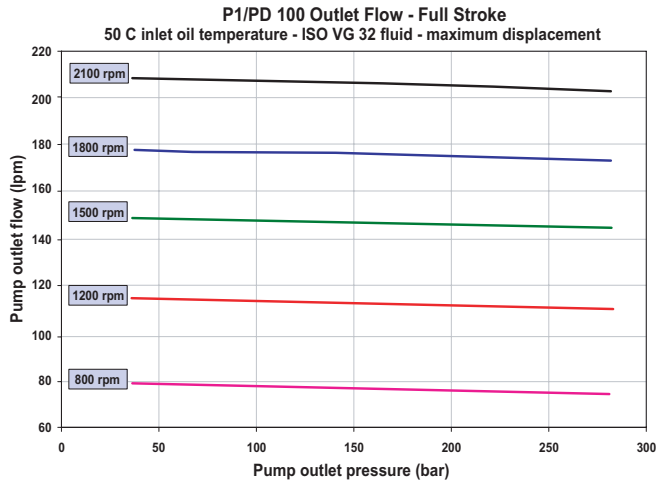

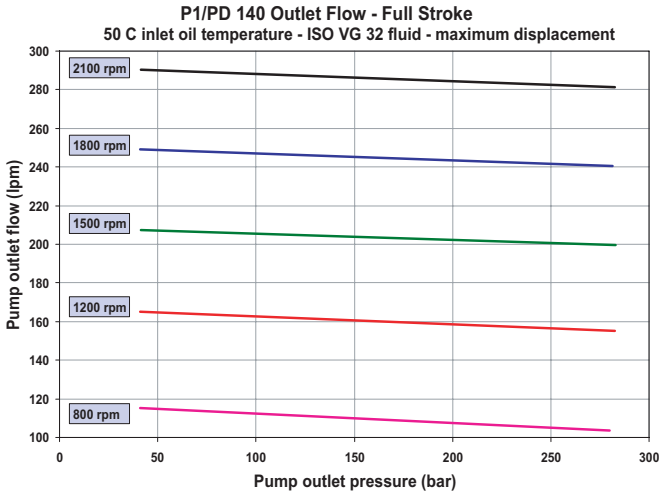

P1/PD Series Typical Shaft Input Power

PD Maximum Speed Rating = 1800 rpm

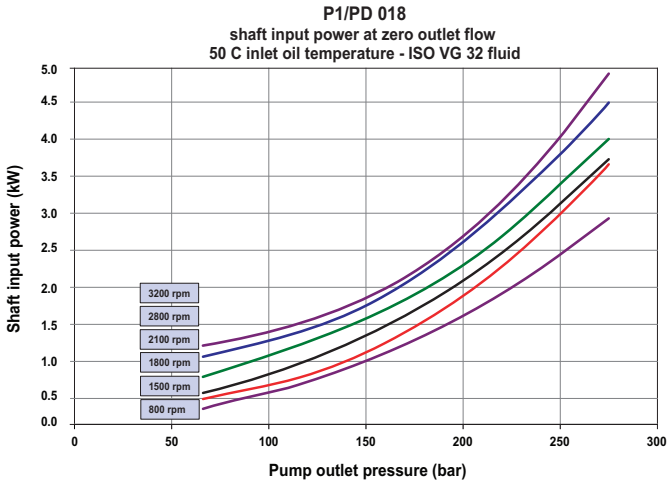

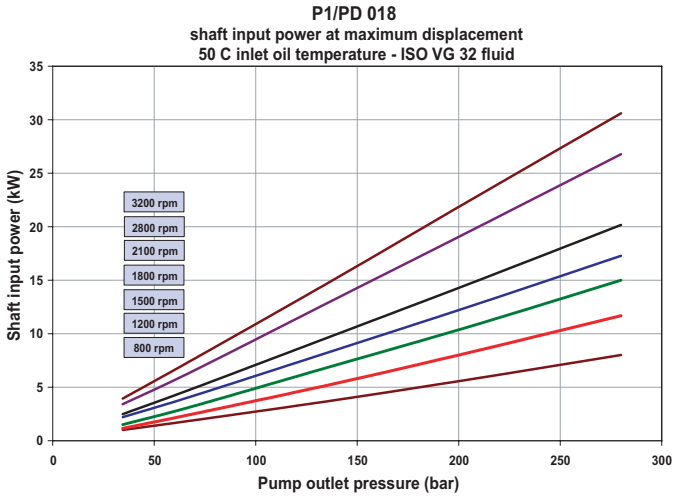

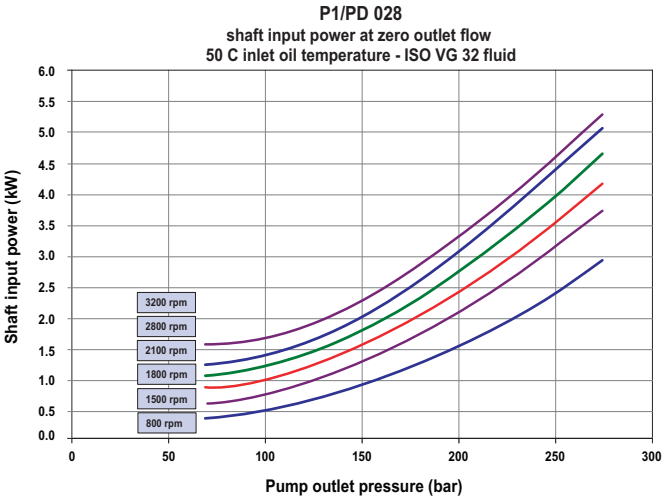

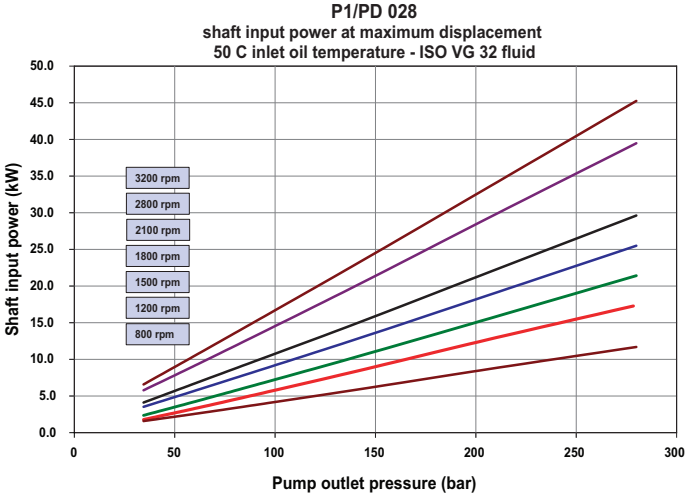

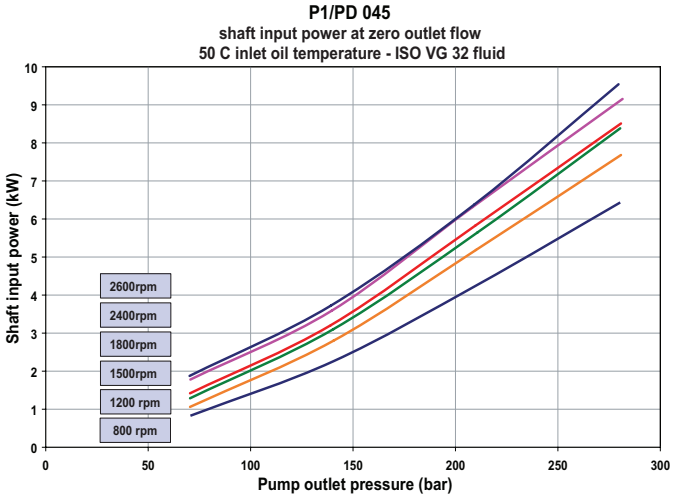

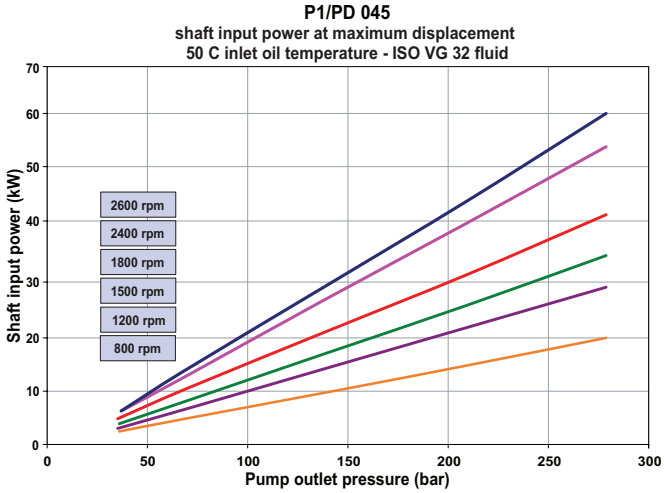

P1/PD Series Typical Shaft Input Power

PD Maximum Speed Rating = 1800 rpm

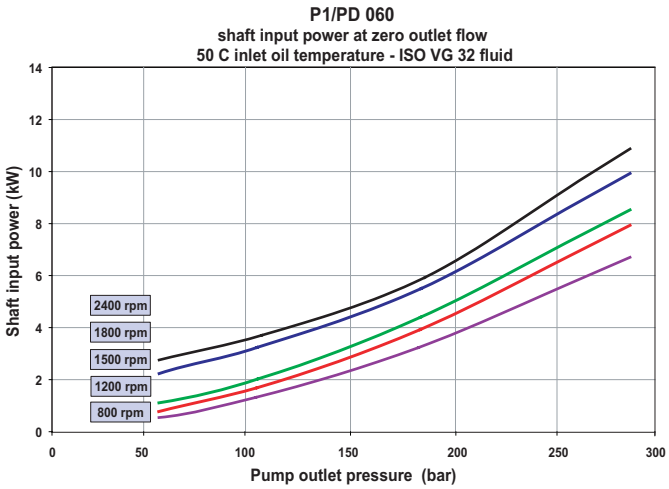

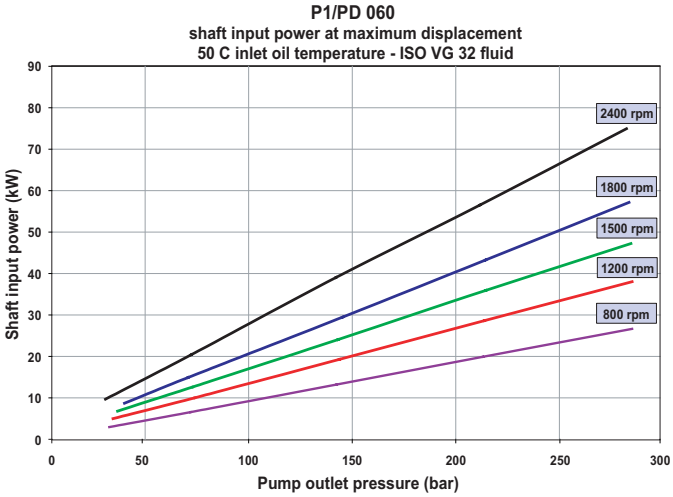

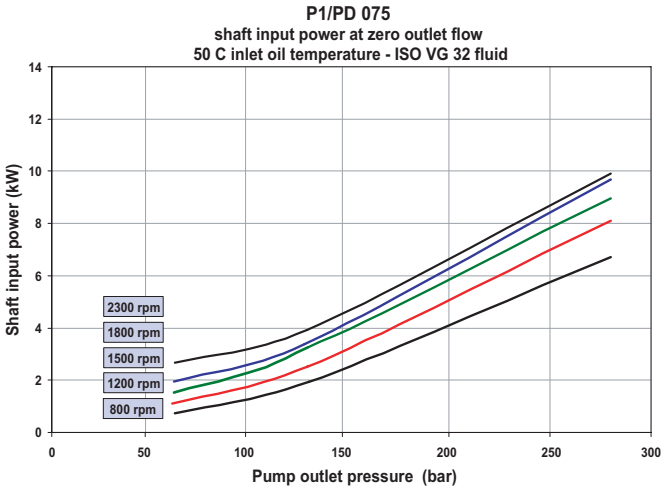

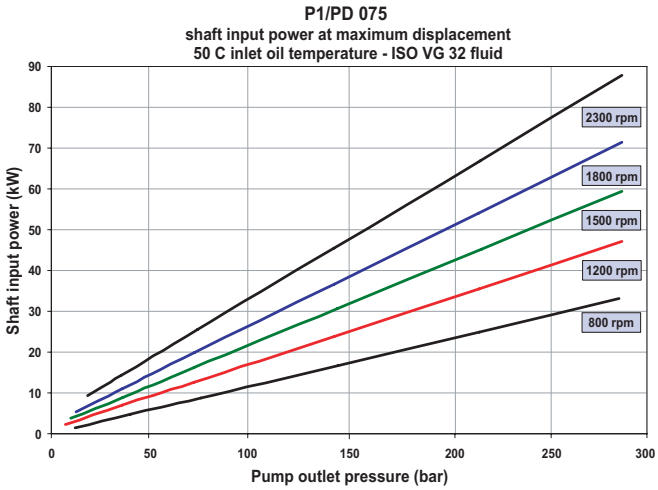

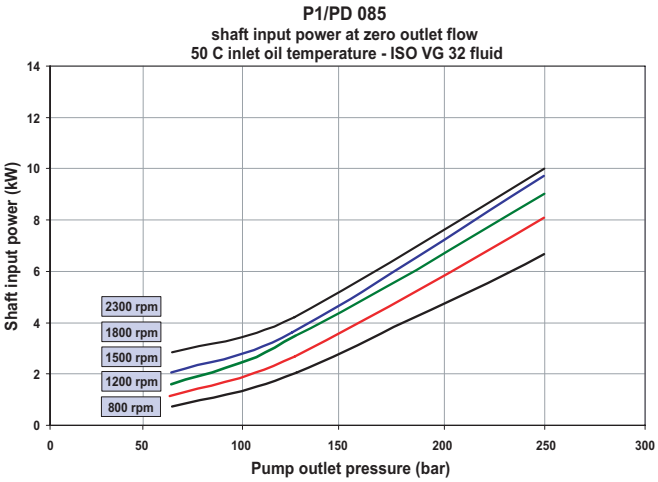

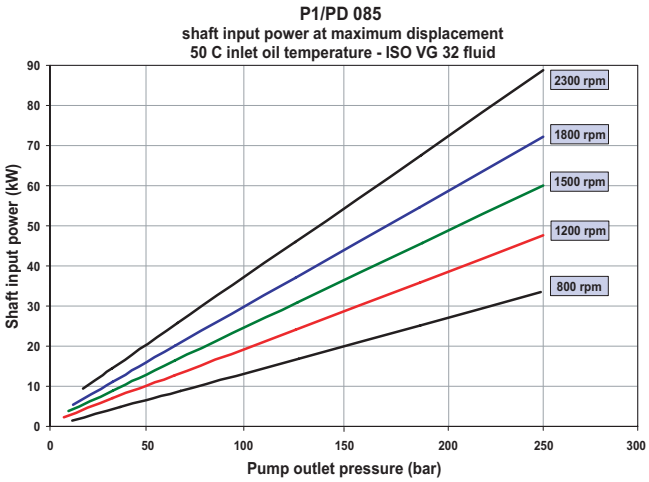

P1/PD Series Typical Shaft Input Power

PD Maximum Speed Rating = 1800 rpm

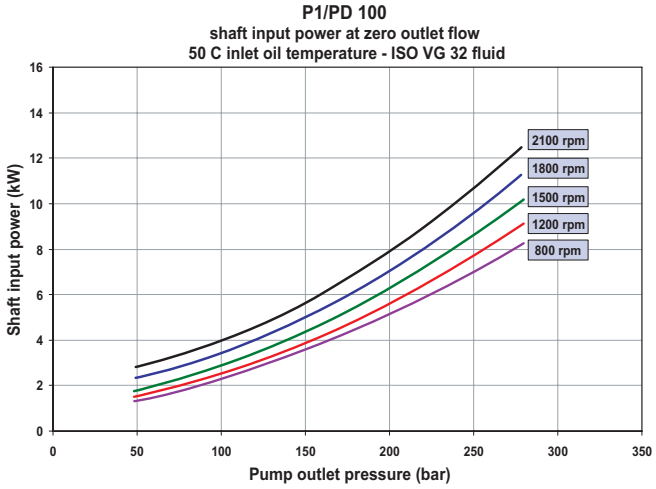

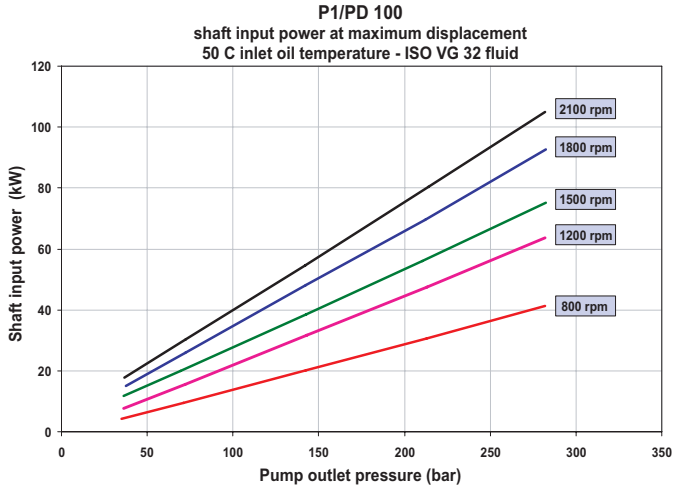

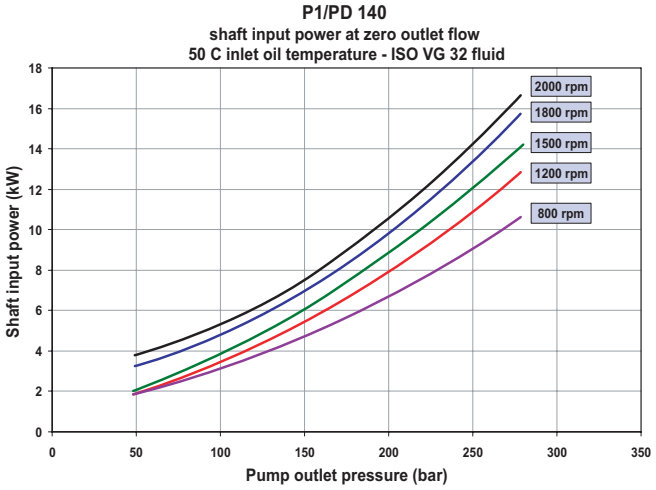

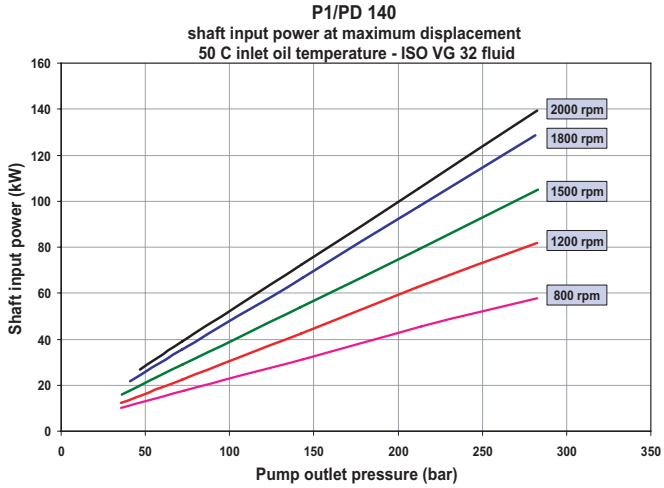

P1/PD Series Typical Shaft Bearing Life

PD Maximum Speed Rating = 1800 rpm

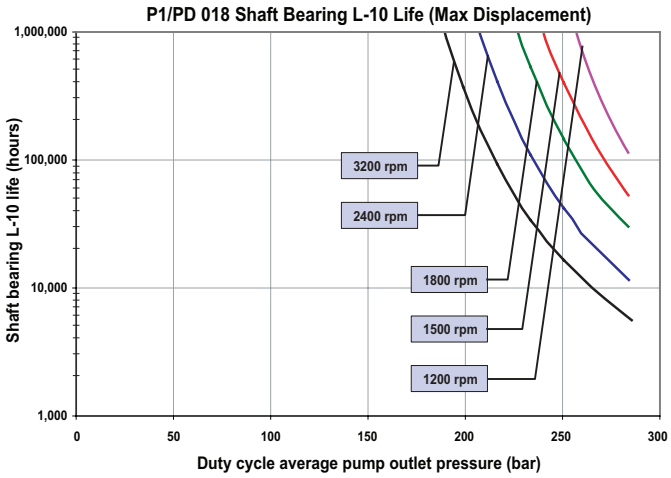

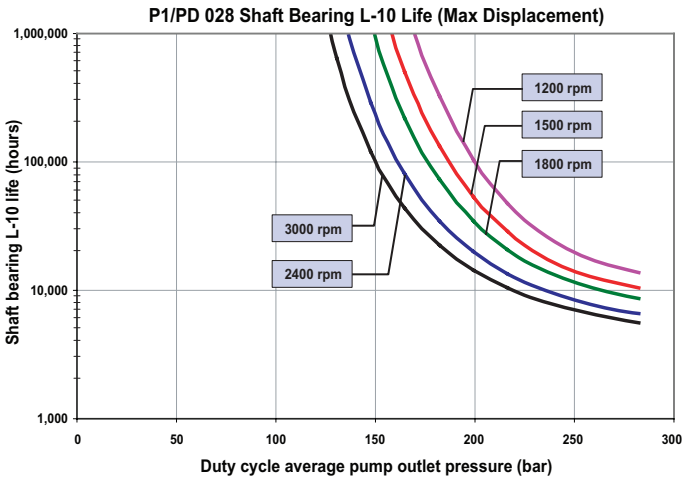

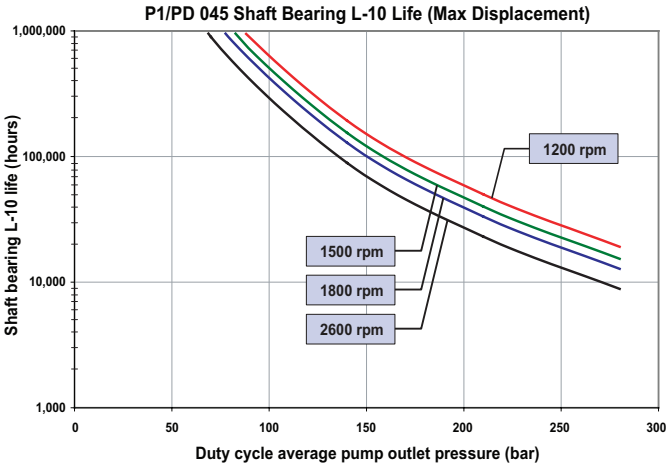

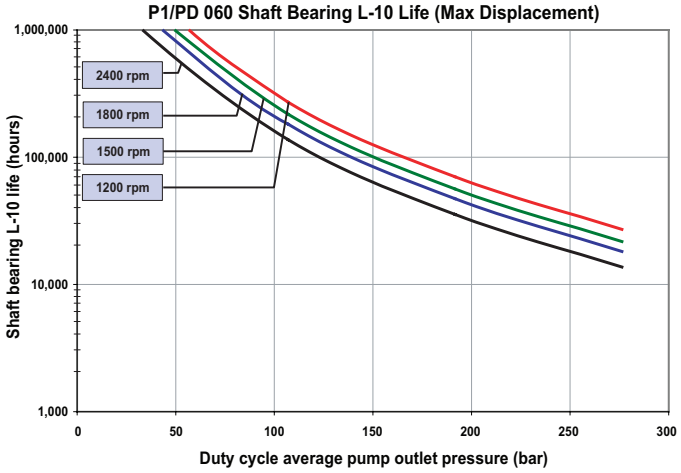

P1/PD Series Typical Shaft Bearing Life

PD Maximum Speed Rating = 1800 rpm

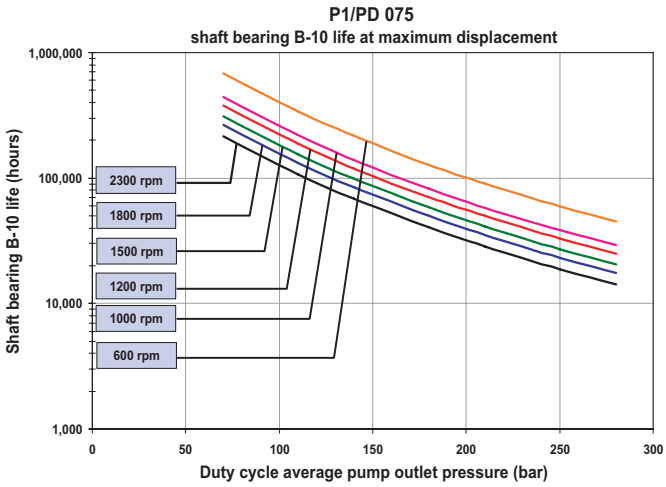

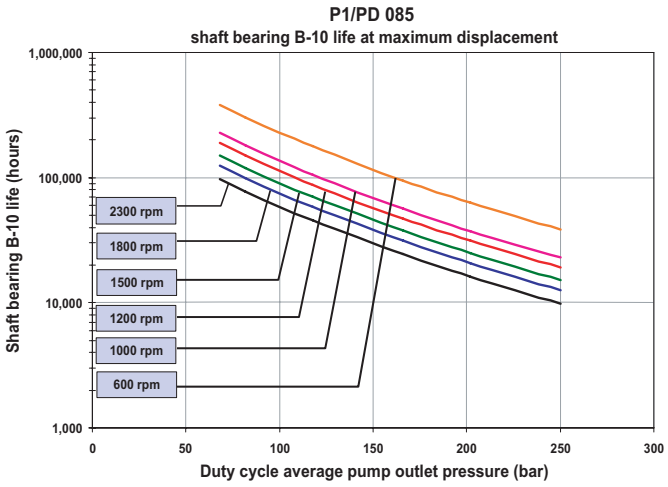

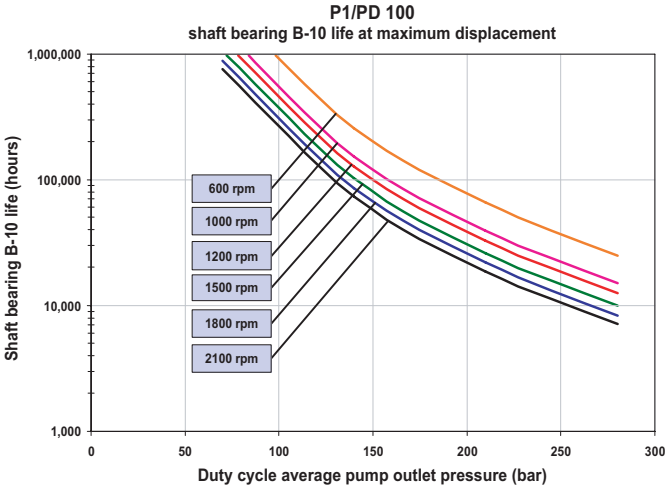

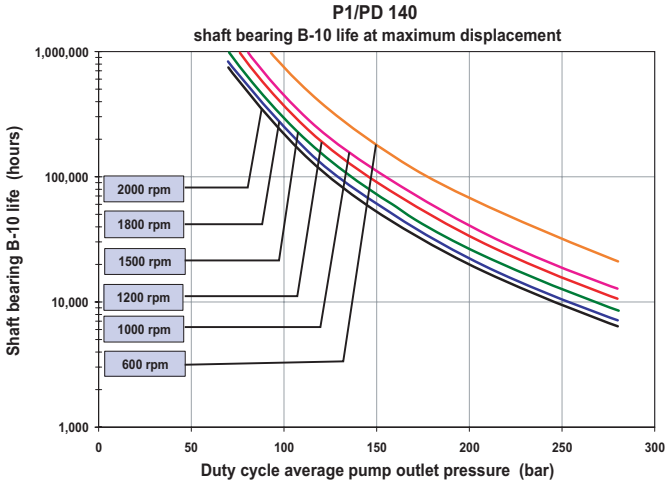

P1 Series Typical Noise Characteristics

(These are anechoic sound pressure readings)

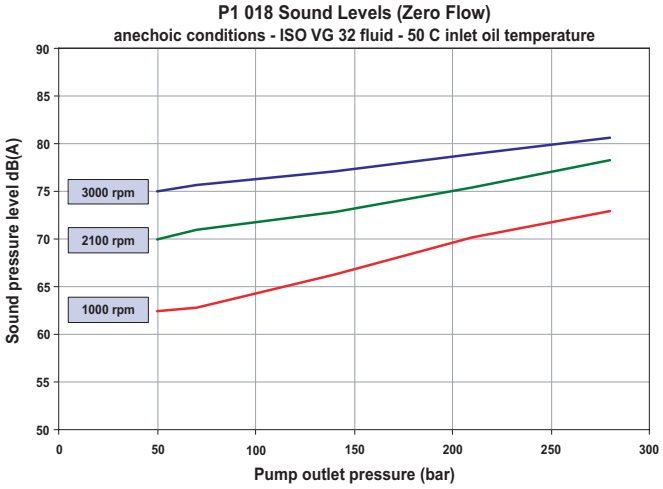

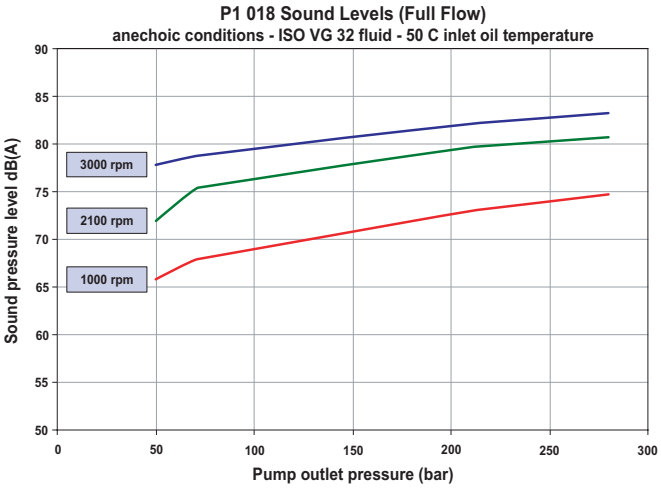

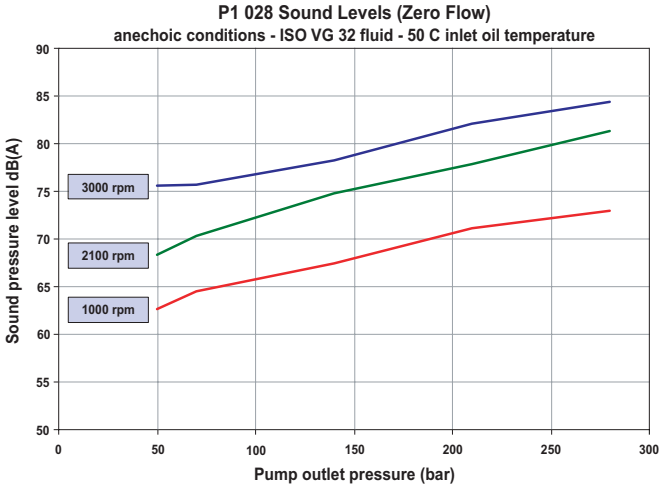

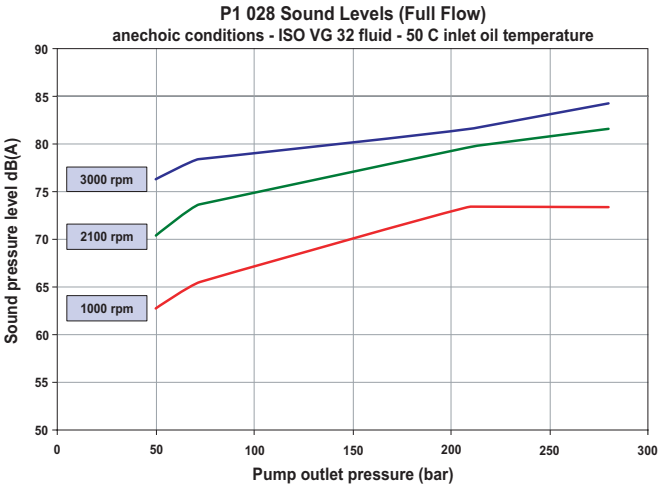

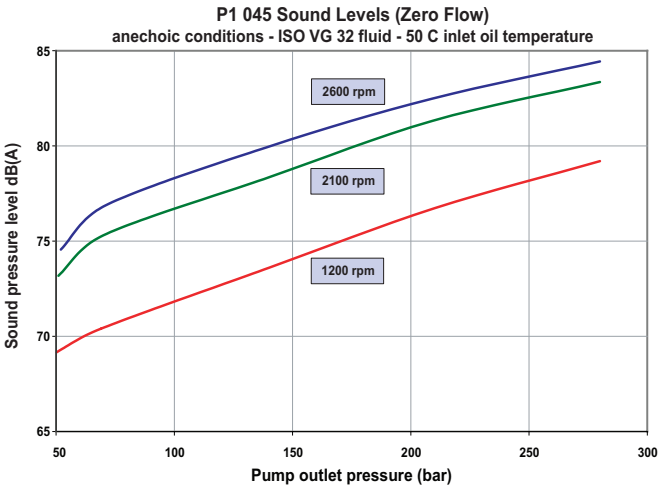

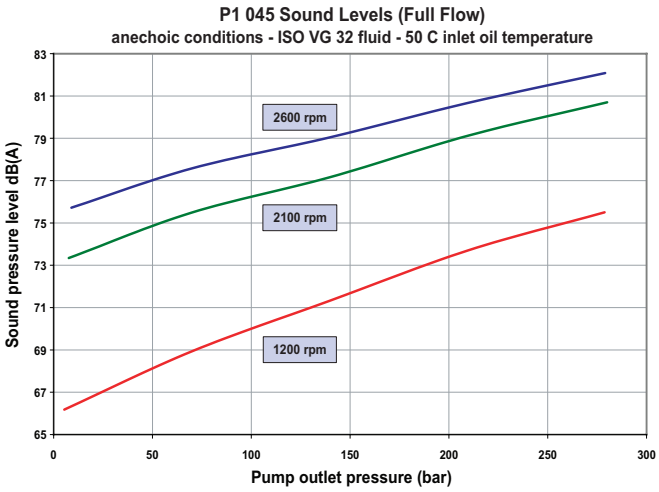

P1 Series Typical Noise Characteristics

(These are anechoic sound pressure readings)

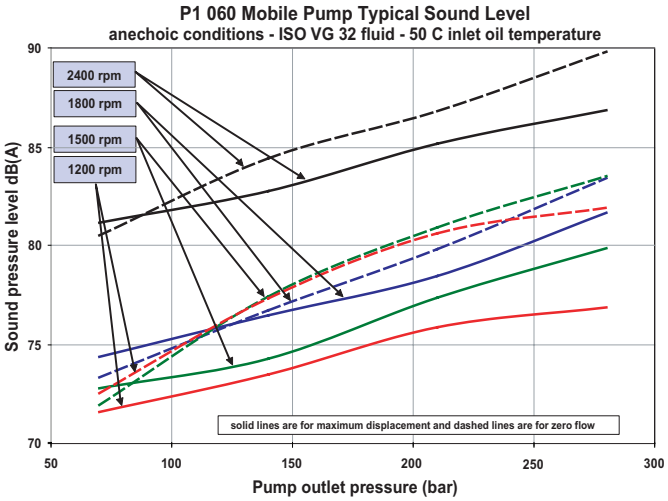

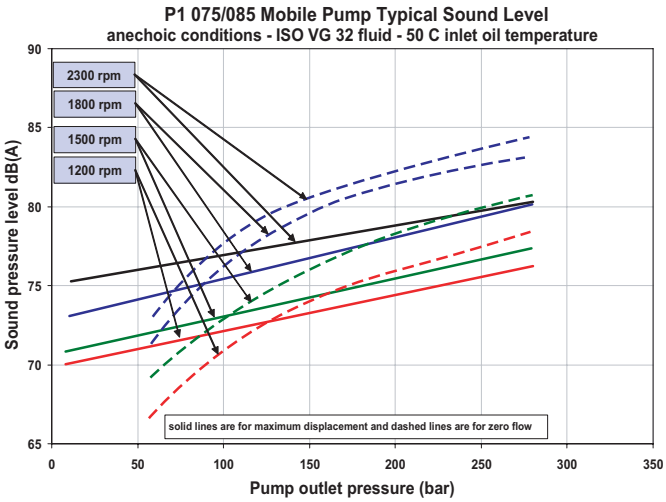

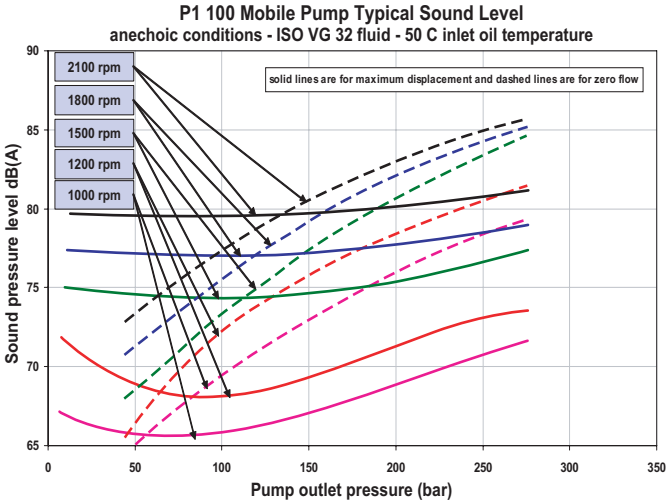

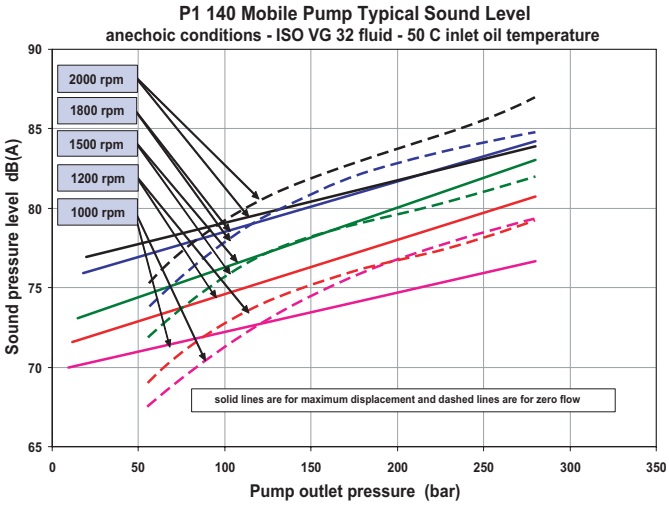

PD Series Typical Noise Characteristics

(These are anechoic sound pressure readings)

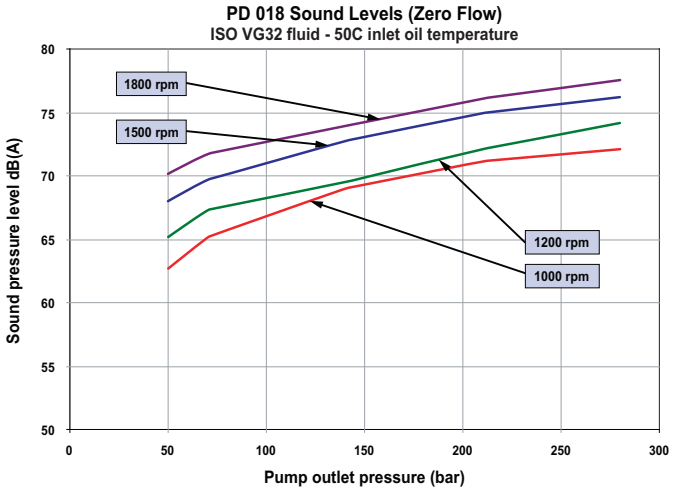

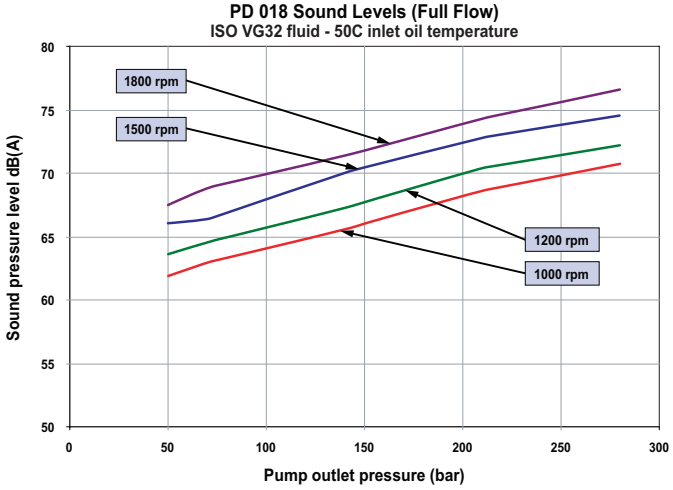

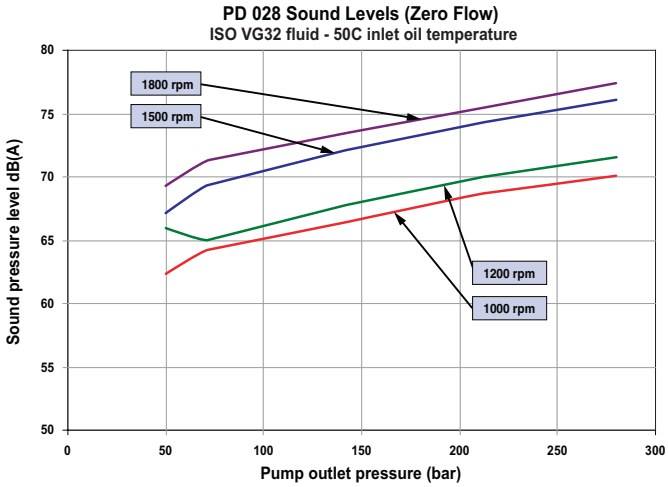

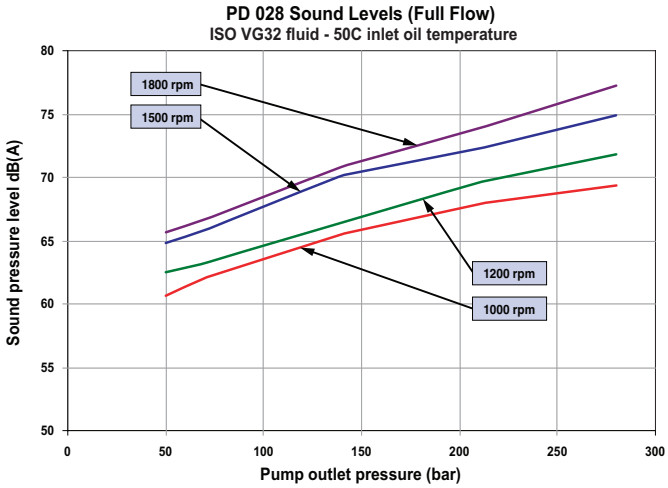

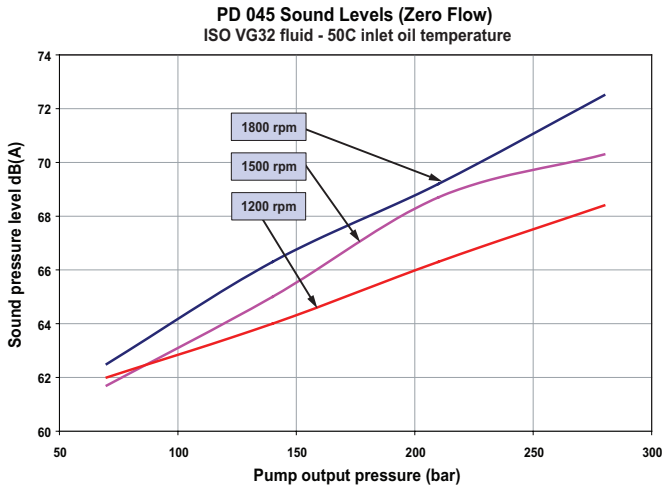

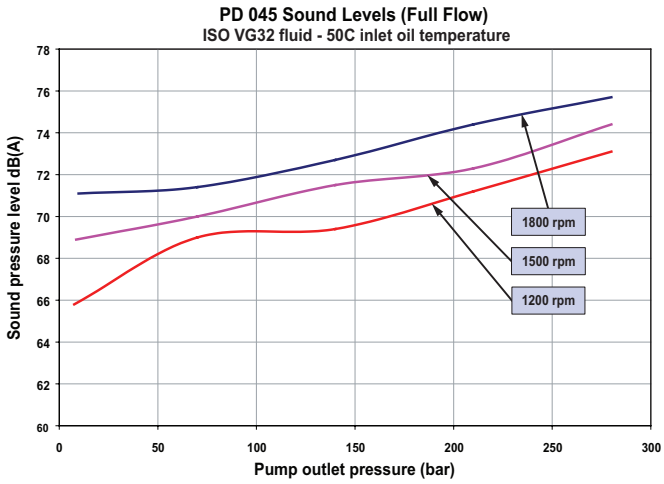

PD Series Typical Noise Characteristics

(These are anechoic sound pressure readings)

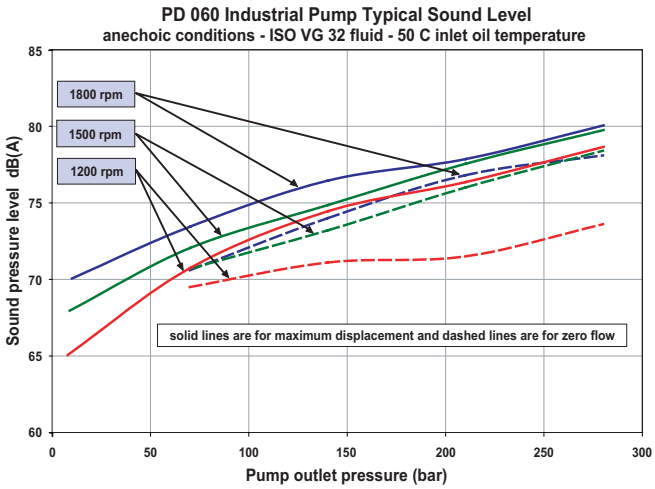

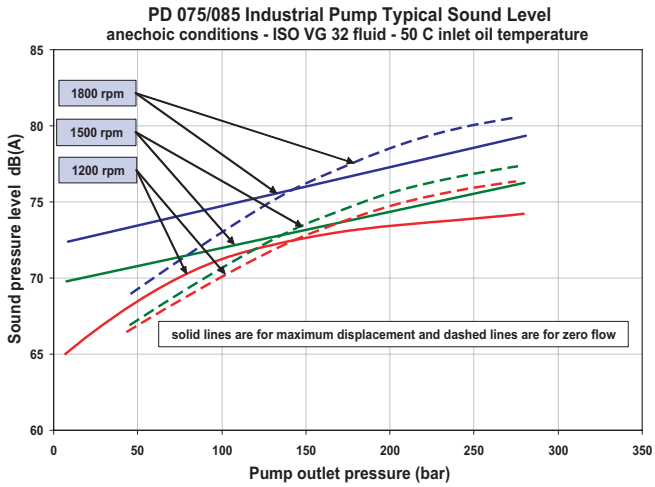

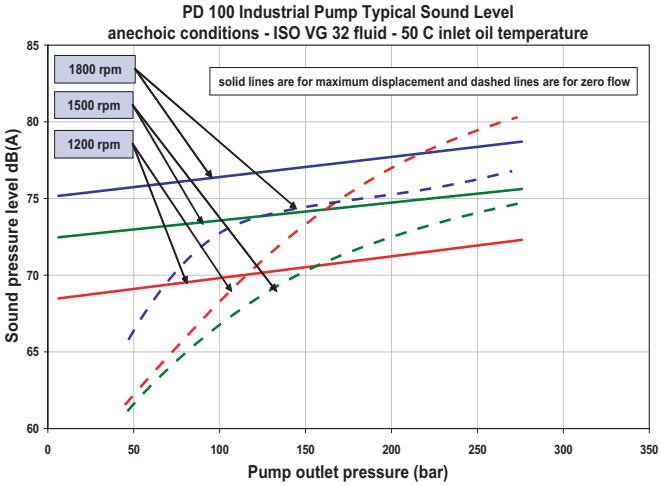

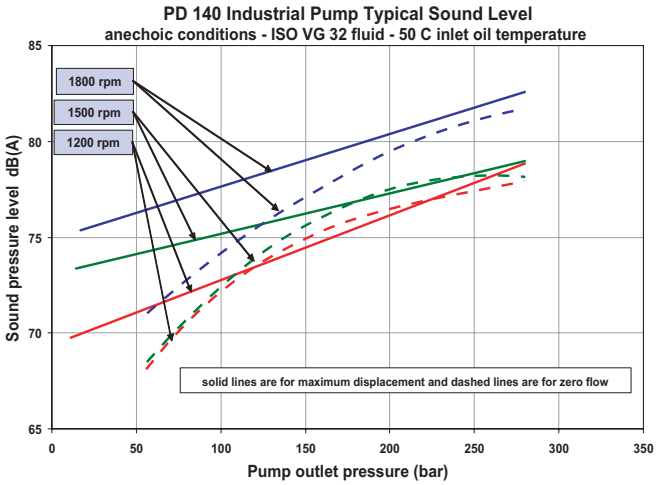

Pump Installation - P1/PD-018
Input Shaft Dimensions

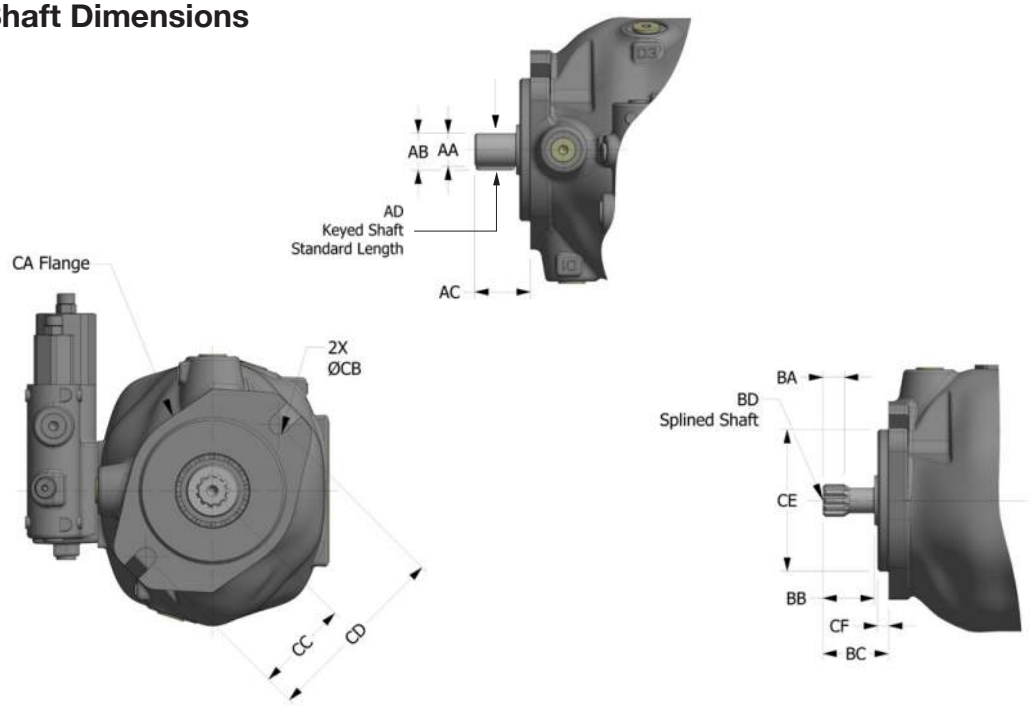

P1/PD-018 Mounting Flange & Shaft Dimensions			
Dimension	**ISO Key (Code 04)**	**SAE (Code 01 or 02)**	**SAE (Code 06)**
AA	20.01/19.99	19.05/19.02	N/A
AB	22.61/22.32	21.20/20.89	N/A
AC	44.3	32.3	N/A
AD	ISO 3019-2: E20N	SAE J744 19-1	N/A
BA	N/A	12.0	12.5
BB	N/A	30.0	24.0
BC	N/A	38.3	32.3
BD	N/A	SPLINE: ANSI 92.1-1996 SAE 19-4 INVOLUTE SPLINE CLASS 7 FLAT ROOT SIDE FIT NUMBER OF TEETH - 11 PITCH - 16/32 PRESSURE ANGLE - 30° MAJOR DIAMETER - 19.05/18.49 PITCH DIAMETER - 17.463	SPLINE: ANSI 92.1-1996 SAE 16-4 (A) INVOLUTE SPLINE CLASS 7 FLAT ROOT SIDE FIT NUMBER OF TEETH - 9 PITCH - 16/32 PRESSURE ANGLE - 30° MAJOR DIAMETER - 15.88/15.32 PITCH DIAMETER - 12.288
CA	ISO 3019-2: 80A2SW	SAE J744: JUN 96 82-2 (A)	SAE J744: JUN 96 82-2 (A)
CB	11.1	11.1	11.1
CC	54.5	53.2	53.2
CD	109.0	106.4	106.4
CE	80.00/79.95	82.55/82.50	82.55/82.50
CF	7.0	6.35	6.35
Keyway Width	6.05/6.00	4.81/4.76	N/A

Pump Installation - P1/PD-018
End Port
“L” or “AM” Control Option

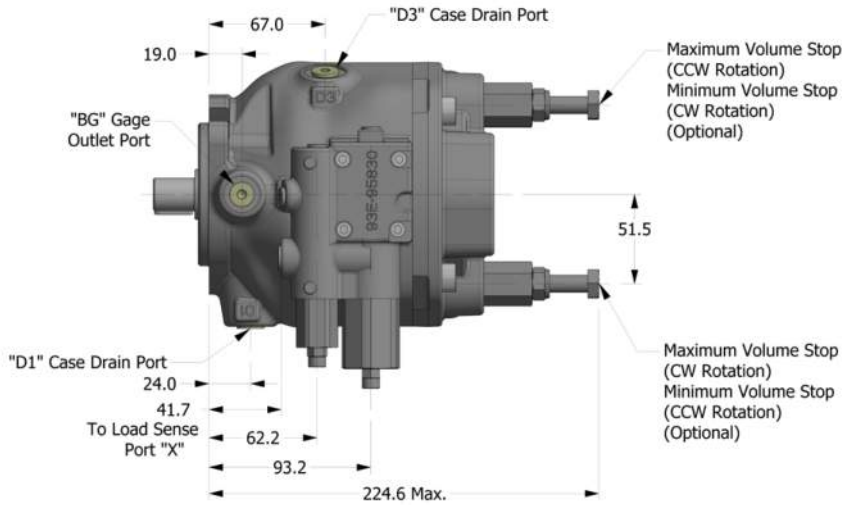

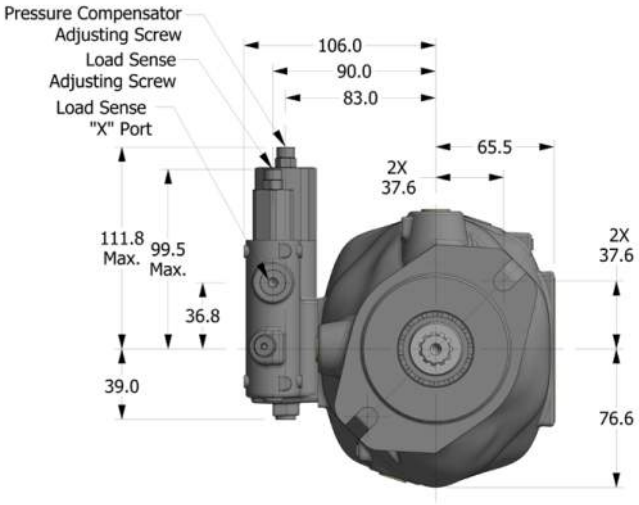

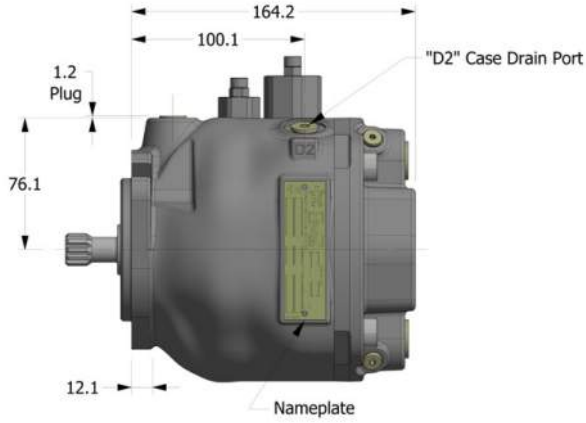

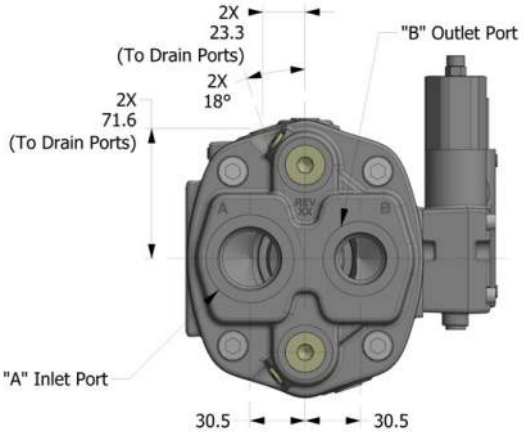

P1/PD-018 Port Sizes			
Ports	**SAE Threaded**	**Metric Threaded**	**BSPP**
"A" Inlet	SAE-16	M33x2	-
"B" Outlet	SAE-12	M27x2	-
BG, X	SAE-4	M12x1.5	1/4"
D1, D2, D3	SAE-6	M16x1.5	3/8"

Note A: SAE o-ring port conforms to SAE J514
Note B: Metric o-ring boss port conforms to ISO 6149-1
Note C: BSPP port conforms to ISO 228-1

Pump Installation - P1/PD-018
Side Port
“L” or “AM” Control Option

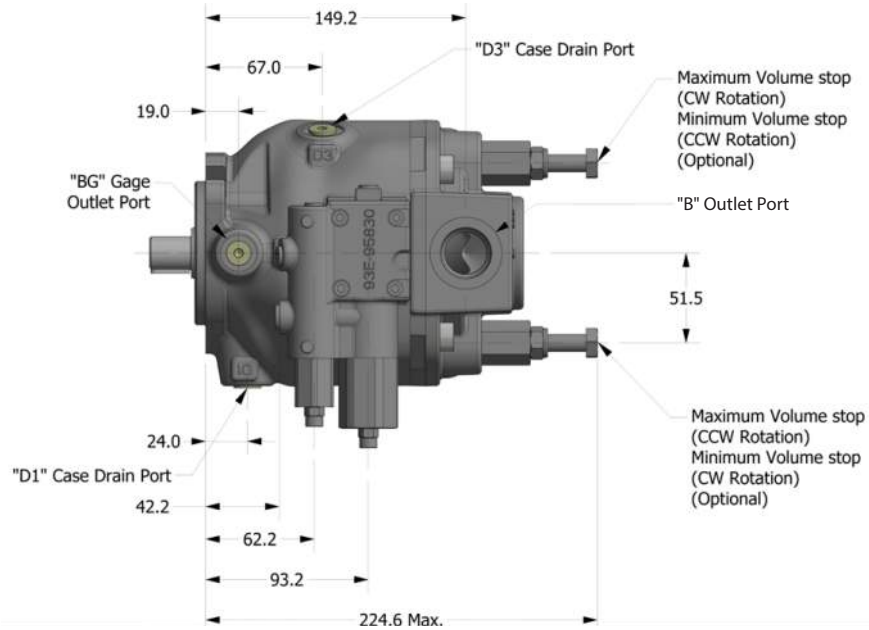

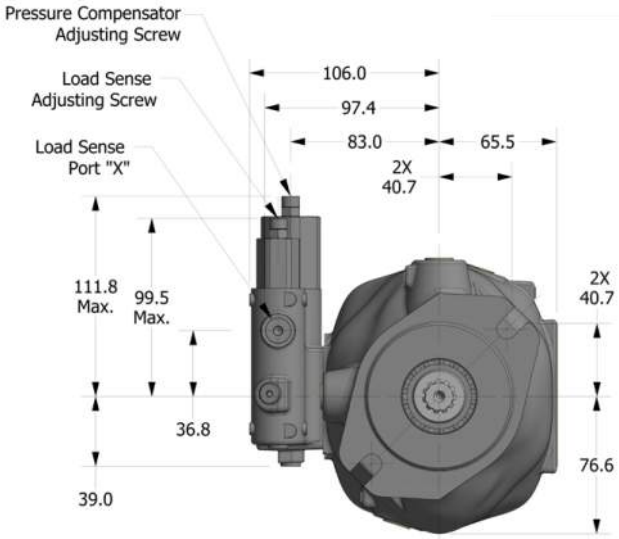

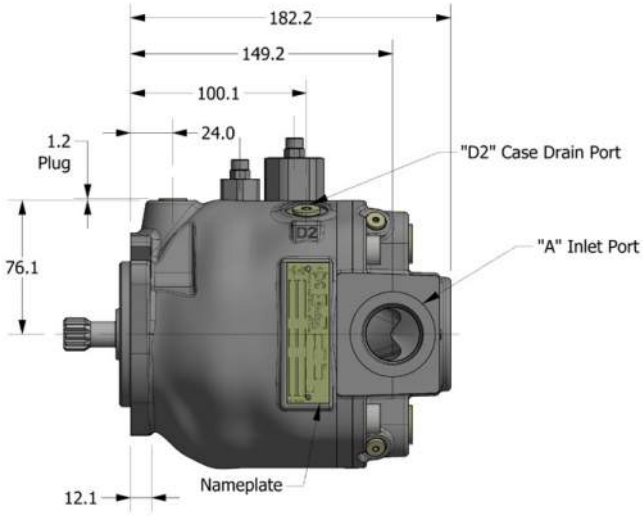

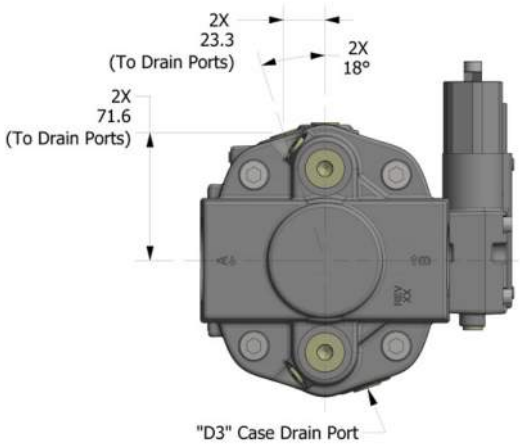

P1/PD-018 Port Sizes			
Ports	**SAE Threaded**	**Metric Threaded**	**BSPP**
"A" Inlet	SAE-16	M33x2	-
"B" Outlet	SAE-12	M27x2	-
BG, X	SAE-4	M12x1.5	1/4"
D1, D2, D3	SAE-6	M16x1.5	3/8"

Note A: SAE o-ring port conforms to SAE J514
Note B: Metric o-ring boss port conforms to ISO 6149-1
Note C: BSPP port conforms to ISO 228-1

Pump Installation - P1/PD-018 Side Ports with Thru-Drive "L" or "AM" Control Option

P1/PD-018 Port Sizes					
Ports	**SAE Flanged**	**SAE Threaded**	**Metric Flanged**	**Metric Threaded**	**BSPP**
"A" Inlet	1" Code 61	SAE-16	DN25	M33x2	-
W Threads	3/8-16 UNC-2B	-	M10x1.5-6H	-	-
"B" Outlet	3/4" Code 61	SAE-12	DN20	M27x2	-
Y Threads	3/8-16 UNC-2B	-	M10x1.5-6H	-	-
BG, X	SAE-4		M12x1.5		1/4"
D1, D2, D3	SAE-6		M16x1.5		3/8"

Note A: SAE flanged ports conform to SAE J518
Note B: SAE o-ring port conforms to SAE J514
Note C: Metric flanged ports conform to ISO 6162
Note D: Metric o-ring boss port conforms to ISO 6149-1
Note E: BSPP port conforms to ISO 228-1

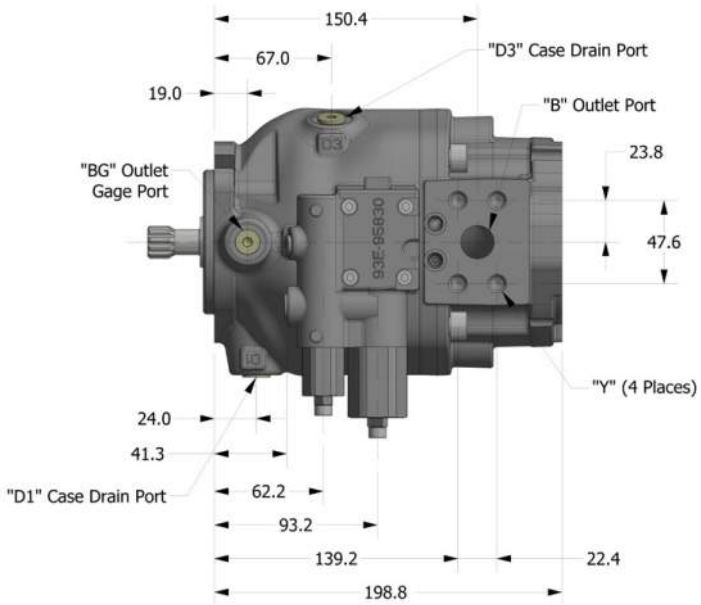

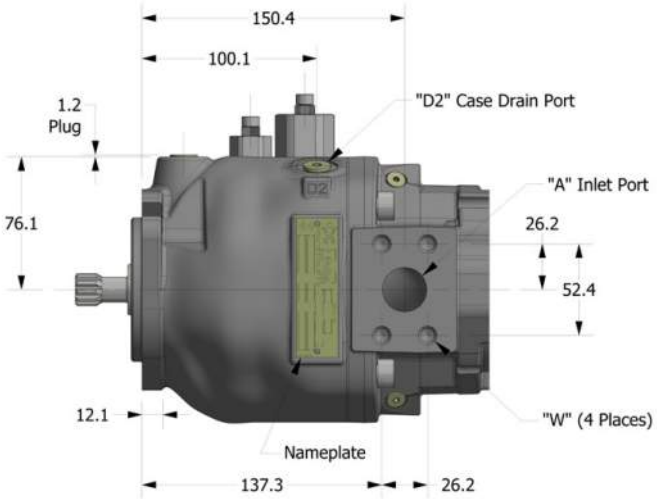

Thru-Drive Mounting Options

SAE-A Mounting Options Information
Model Number T0*A Spline: ANSI B92.1 1996 SAE 16-4 (A) Involute Spline Class 7 Flat Root Side Fit Number of Teeth - 9 Pitch - 16/32 Pressure Angle - 30° Major Diameter - 13.06/12.93 mm Pitch Diameter - 14.29 mm
Model Number T0*H Spline: ANSI B92.1 1996 SAE 19-4 Involute Spline Class 7 Flat Root Side Fit Number of Teeth - 11 Pitch - 16/32 Pressure Angle - 30° Minor Diameter - 16.14/16.02 mm Pitch Diameter - 17.46 mm

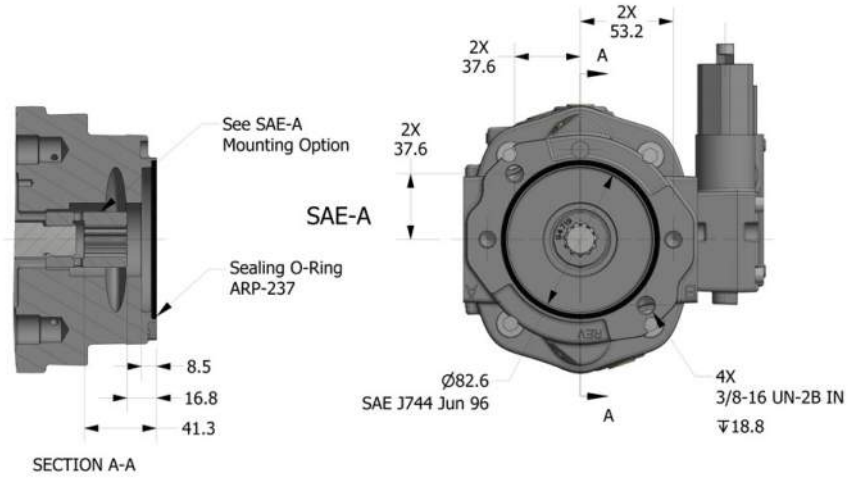

Parker Hannifin Corporation
Hydraulic Pump and Power Systems Division
United States

Pump Installation - P1/PD-028
Input Shaft Dimensions

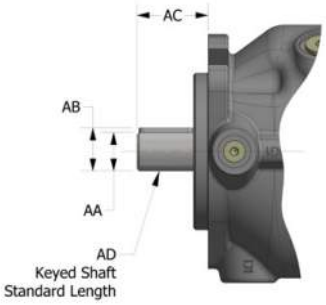

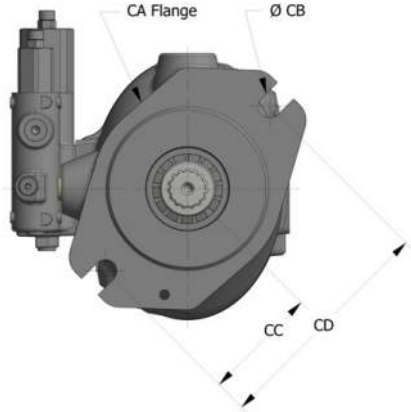

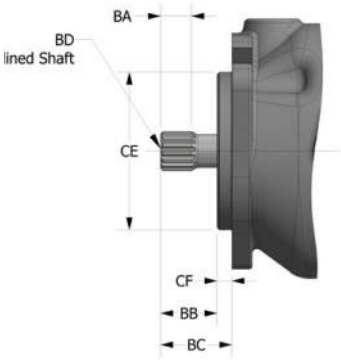

P1/PD-028 Mounting Flange & Shaft Dimensions			
Dimension	**ISO (Code 04)**	**SAE (Code 01 or 02)**	**SAE (Code 08)**
AA	25.01/24.99	25.40/25.35	N/A
AB	27.20/26.71	28.16/27.80	N/A
AC	50.0	46.0	N/A
AD	ISO 3019-2: E25N	SAE J744 25-1 (B-B)	N/A
BA	N/A	20.0	15.0
BB	N/A	38.0	33.0
BC	N/A	46.0	41.0
BD	N/A	SPLINE: ANSI B92.1-1996 SAE 25-4 (B-B) INVOLUTE SPLINE CLASS 7 FLAT ROOT SIDE FIT NUMBER OF TEETH - 15 PITCH - 16/32 PRESSURE ANGLE - 30° MAJOR DIAMETER - 25.40/24.84 PITCH DIAMETER - 23.813	SPLINE: ANSI B92.1-1996 SAE 22-4 (B) INVOLUTE SPLINE CLASS 7 FLAT ROOT SIDE FIT NUMBER OF TEETH - 13 PITCH - 16/32 PRESSURE ANGLE - 30° MAJOR DIAMETER - 22.23/21.67 PITCH DIAMETER - 20.638
CA	ISO 3019-2: 100B2SW	SAE J744: JUN96 101-2 (B)	SAE J744: JUN96 101-2 (B)
CB	13.7/13.3	14.6/14.2	14.6/14.2
CC	70.0	73.0	73.0
CD	140.0	146.0	146.0
CE	100.00/99.95	101.60/101.55	101.60/101.55
CF	9.5/9.0	9.7/9.5	9.7/9.5
Keyway Width	8.03/7.98	6.40/6.35	N/A

Pump Installation - P1/PD-028
End Port
“L” or “AM” Control Option

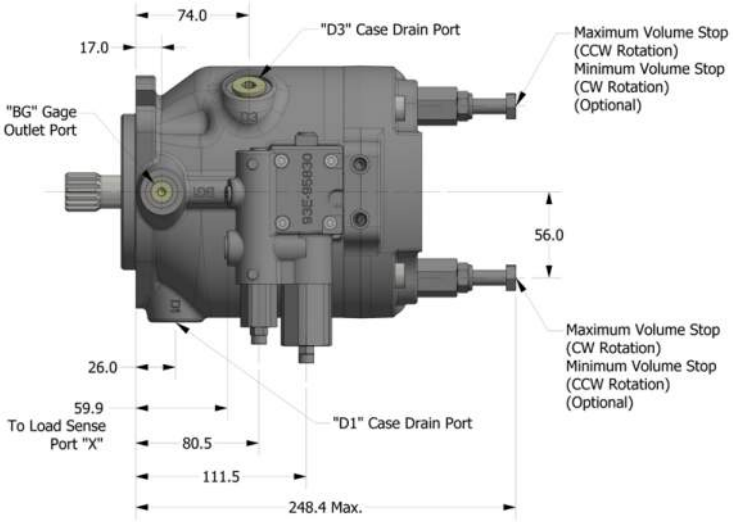

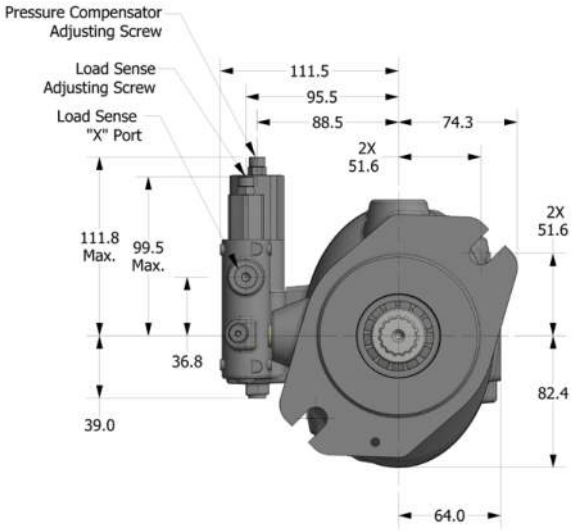

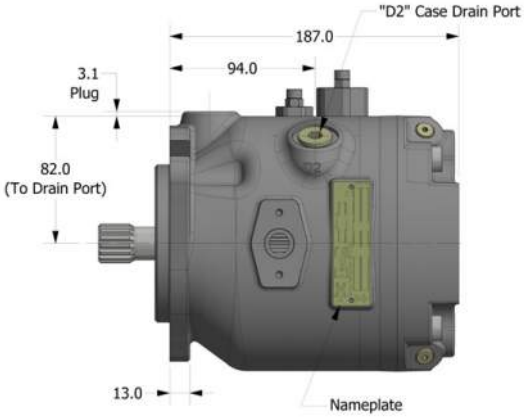

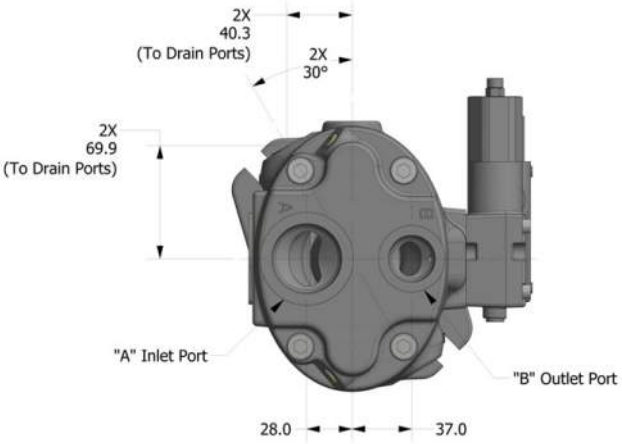

P1/PD-028 Port Sizes					
Ports	**SAE Flanged**	**SAE Threaded**	**Metric Flanged**	**Metric Threaded**	**BSPP**
"A" Inlet	1-1/4" Code 61	SAE-20	DN32	M42x2	-
W Threads	7/16-14 UNC-2B	-	M10x1.5-6H	-	-
"B" Outlet	3/4" Code 61	SAE-12	DN19	M27x2	-
Y Threads	3/8-16 UNC-2B	-	M10x1.5-6H	-	-
BG, X	SAE-4		M12x1.5		1/4"
D1, D2, D3	SAE-8		M22x1.5		1/2"

Note A: SAE flanged ports conform to SAE J518
Note B: SAE o-ring port conforms to SAE J514
Note C: Metric flanged ports conform to ISO 6162
Note D: Metric o-ring boss port conforms to ISO 6149-1
Note E: BSPP port conforms to ISO 228-1

Pump Installation - P1/PD-028
Side Port
“L” or “AM” Control Option

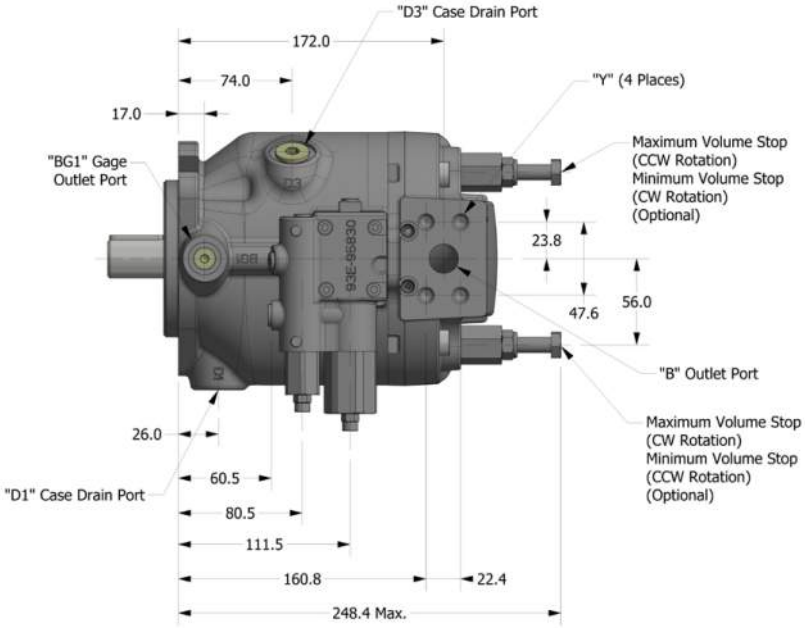

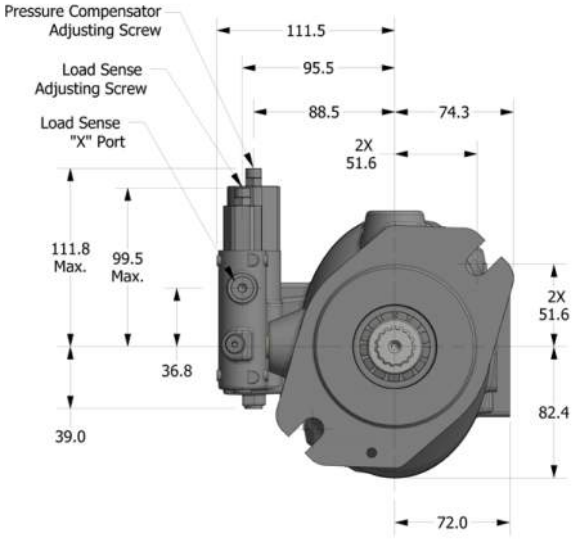

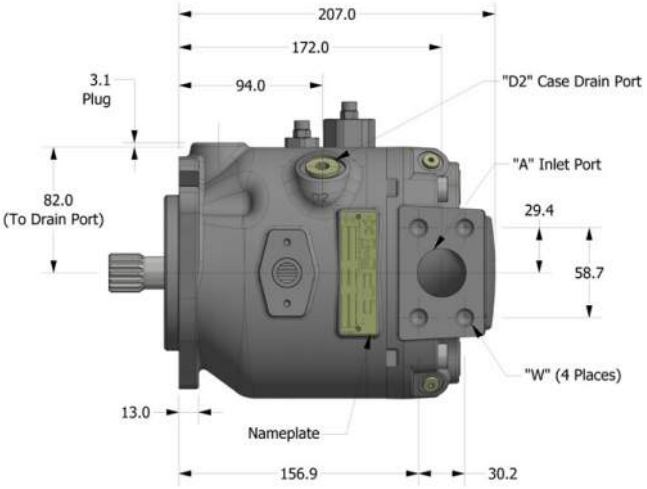

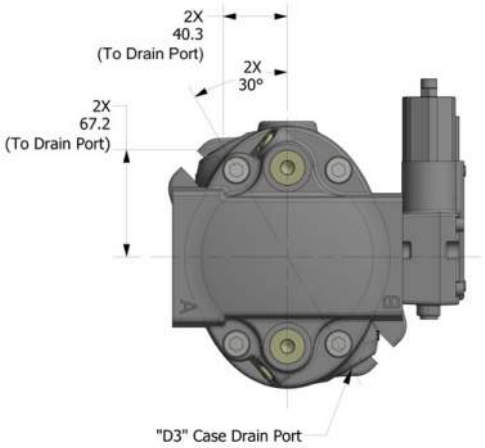

P1/PD-028 Port Sizes					
Ports	**SAE Flanged**	**SAE Threaded**	**Metric Flanged**	**Metric Threaded**	**BSPP**
"A" Inlet	1-1/4" Code 61	SAE-20	DN32	M42x2	-
W Threads	7/16-14 UNC-2B	-	M10x1.5-6H	-	-
"B" Outlet	3/4" Code 61	SAE-12	DN19	M27x2	-
Y Threads	3/8-16 UNC-2B	-	M10x1.5-6H	-	-
BG, X	SAE-4		M12x1.5		1/4"
D1, D2, D3	SAE-8		M22x1.5		1/2"

Note A: SAE flanged ports conform to SAE J518
Note B: SAE o-ring port conforms to SAE J514
Note C: Metric flanged ports conform to ISO 6162
Note D: Metric o-ring boss port conforms to ISO 6149-1
Note E: BSPP port conforms to ISO 228-1

Pump Installation - P1/PD-028 Side Ports with Thru-Drive "L" or "AM" Control Option

P1/PD-028 Port Sizes					
Ports	**SAE Flanged**	**SAE Threaded**	**Metric Flanged**	**Metric Threaded**	**BSPP**
"A" Inlet	1-1/4" Code 61	SAE-20	DN32	M42x2	-
W Threads	7/16-14 UNC-2B	-	M10x1.5-6H	-	-
"B" Outlet	3/4" Code 61	SAE-12	DN19	M27x2	-
Y Threads	3/8-16 UNC-2B	-	M10x1.5-6H	-	-
BG, X	SAE-4		M12x1.5		1/4"
D1, D2, D3	SAE-8		M22x1.5		1/2"

Note A: SAE flanged ports conform to SAE J518
Note B: SAE o-ring port conforms to SAE J514
Note C: Metric flanged ports conform to ISO 6162
Note D: Metric o-ring boss port conforms to ISO 6149-1
Note E: BSPP port conforms to ISO 228-1

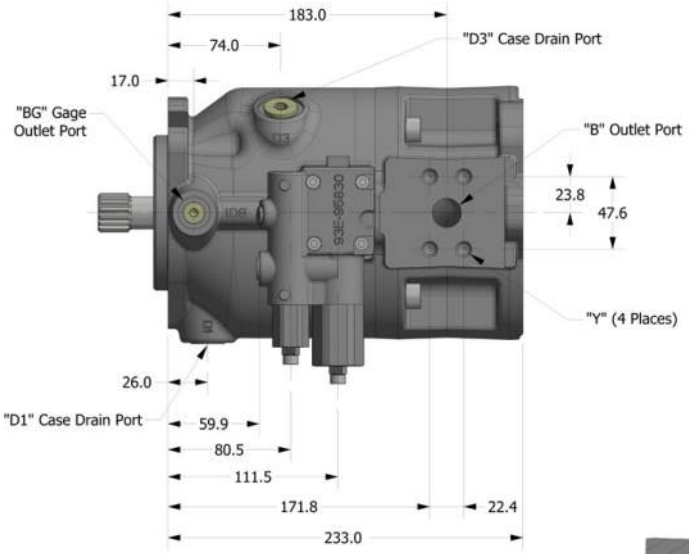

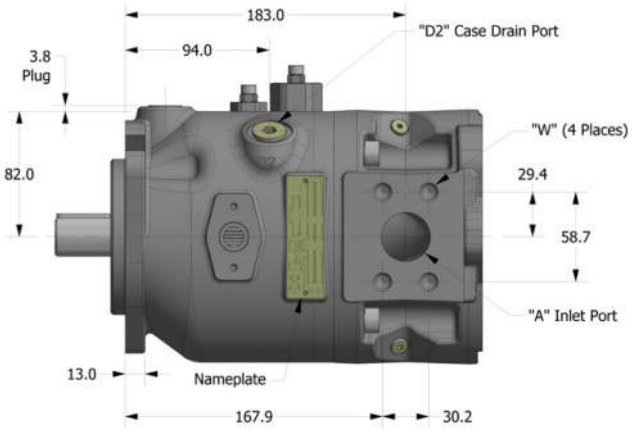

Thru-Drive Mounting Options

SAE-A Mounting Options Information	
Model Number T0*A Spline: ANSI B92.1 1996 SAE 16-4 (A) Involute Spline Class 7 Flat Root Side Fit Number of Teeth - 9 Pitch - 16/32 Pressure Angle - 30° Major Diameter - 13.06/12.93 mm Pitch Diameter - 14.29 mm	Model Number T0*H Spline: ANSI B92.1 1996 SAE 19-4 Involute Spline Class 7 Flat Root Side Fit Number of Teeth - 11 Pitch - 16/32 Pressure Angle - 30° Minor Diameter - 16.14/16.02 mm Pitch Diameter - 17.46 mm

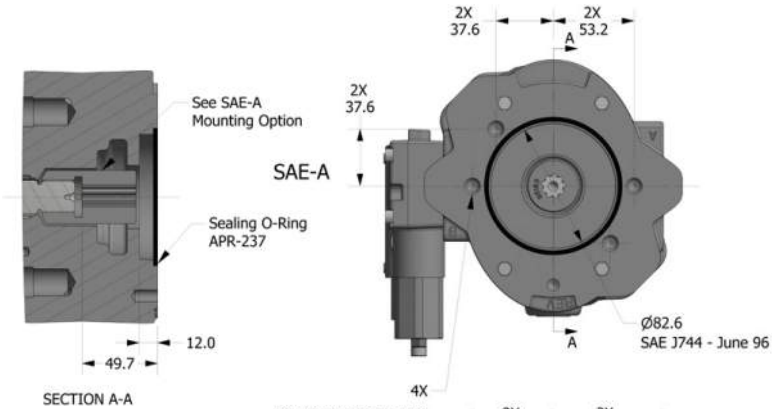

SAE-B Mounting Options Information	
Model Number T0*B Spline: ANSI B92.1 1996 SAE 22-4 (B) Involute Spline Class 7 Flat Root Side Fit Number of Teeth - 13 Pitch - 16/32 Pressure Angle - 30° Minor Diameter - 19.28/19.15 mm Pitch Diameter - 20.64 mm	Model Number T0*Q Spline: ANSI B92.1 1996 SAE 25-4 (B-B) Involute Spline Class 7 Flat Root Side Fit Number of Teeth - 15 Pitch - 16/32 Pressure Angle - 30° Minor Diameter - 22.40/22.28 mm Pitch Diameter - 23.81 mm

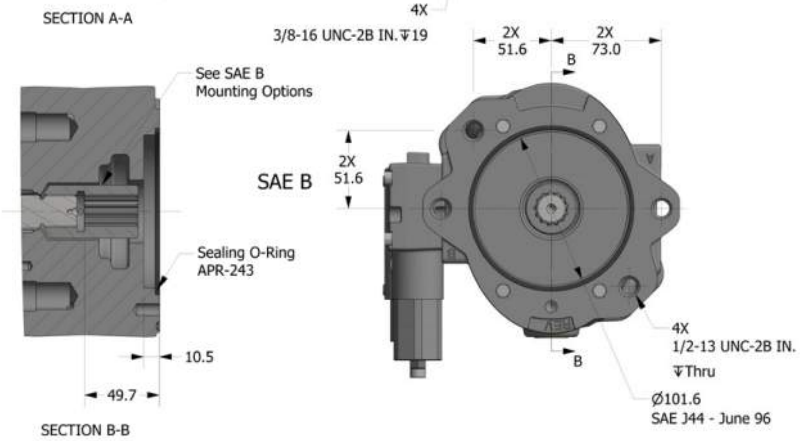

Parker Hannifin Corporation
Hydraulic Pump and Power Systems Division
United States

Pump Installation - P1/PD-045
Input Shaft Dimensions

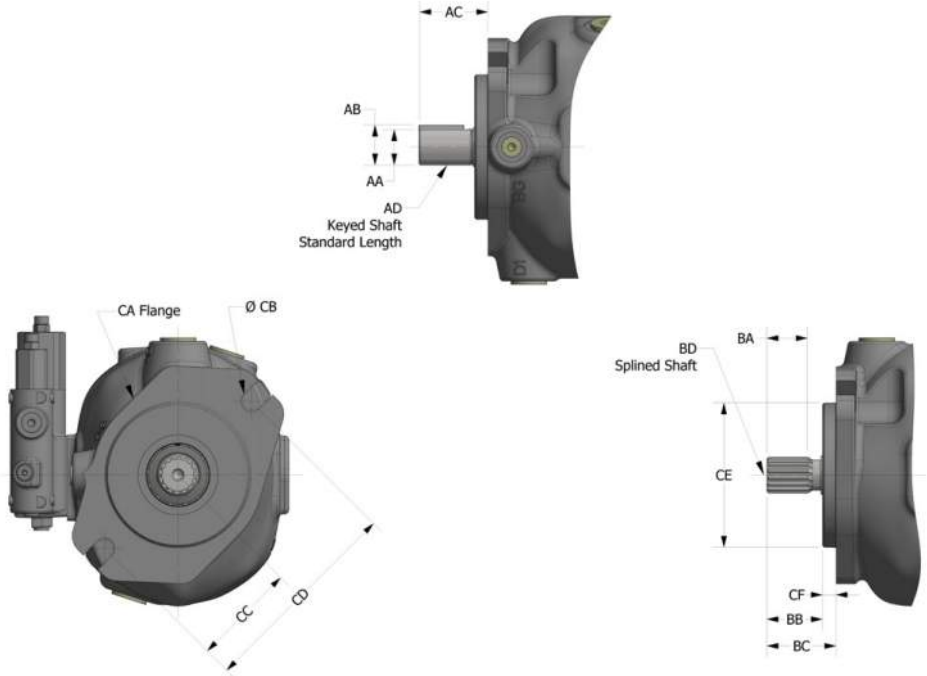

P1/PD-045 Mounting Flange & Shaft Dimensions			
Dimension	**ISO (Code 04)**	**SAE (Code 01 or 02)**	**SAE (Code 08)**
AA	25.01/24.99	25.40/25.35	N/A
AB	28.01/27.77	28.26/27.97	N/A
AC	52.0	46.0	N/A
AD	ISO 3019-2: E25N	SAE J744 25-1 (B-B)	N/A
BA	N/A	28.5	23.0
BB	N/A	38.0	33.0
BC	N/A	46.0	41.0
BD	N/A	SPLINE: ASA B5.15-1960 SAE 25-4 (B-B) INVOLUTE SPLINE CLASS 2 FLAT ROOT SIDE FIT NUMBER OF TEETH - 15 PITCH - 16/32 PRESSURE ANGLE - 30° MAJOR DIAMETER - 24.98/24.85 PITCH DIAMETER - 23.813	SPLINE: ASA B5.15-1960 SAE 22-4 (B) INVOLUTE SPLINE CLASS 2 FLAT ROOT SIDE FIT NUMBER OF TEETH - 13 PITCH - 16/32 PRESSURE ANGLE - 30° MAJOR DIAMETER - 21.81/21.67 PITCH DIAMETER - 20.638
CA	ISO 3019-2: 100B2SW	SAE J744: JUN96 101-2 (B)	SAE J744: JUN96 101-2 (B)
CB	13.8/13.5	14.6/14.2	14.6/14.2
CC	70.0	73.0	73.0
CD	140.0	146.0	146.0
CE	100.00/99.95	101.60/101.55	101.60/101.55
CF	9.5/9.0	9.7/9.2	9.7/9.2
Keyway Width	8.01/7.96	6.40/6.35	N/A

Pump Installation - P1/PD-045
End Port
“L” or “AM” Control Option

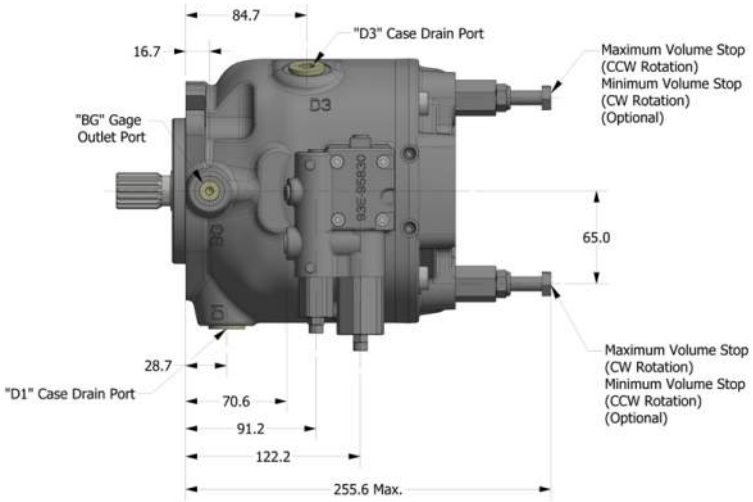

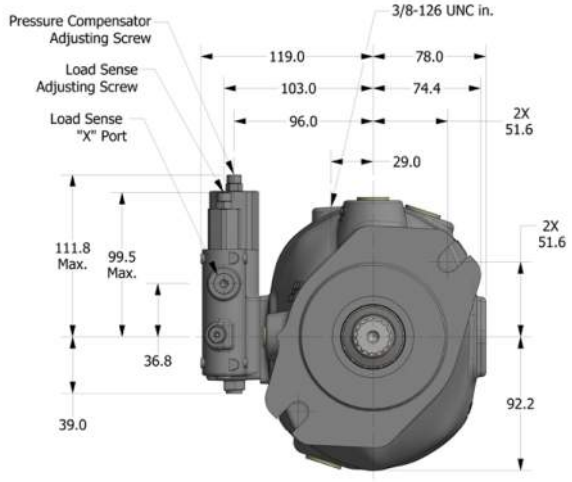

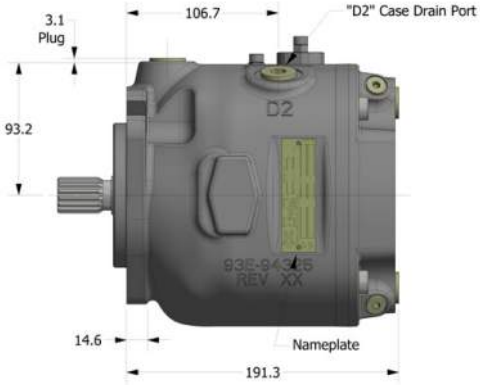

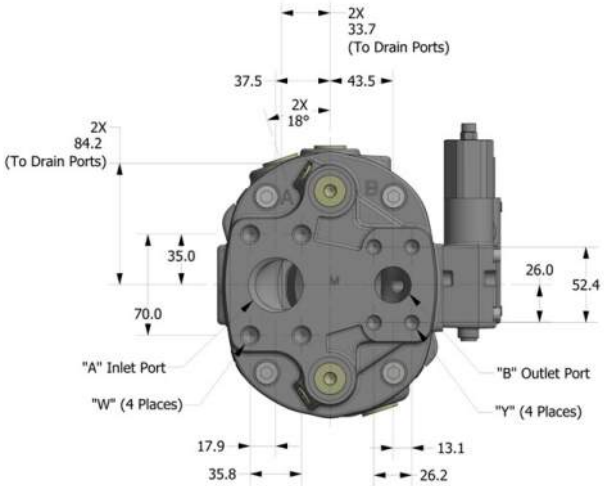

P1/PD-045 Port Sizes					
Ports	**SAE Flanged**	**SAE Threaded**	**Metric Flanged**	**Metric Threaded**	**BSPP**
"A" Inlet	1-1/2" Code 61	SAE-24	DN38	M48x2	-
W Threads	1/2-13 UNC-2B	-	M12x1.75-6H	-	-
"B" Outlet	1" Code 61	SAE-16	DN25	M33x2	-
Y Threads	3/8-16 UNC-28	-	M10x1.5-6H	-	-
BG, X	SAE-4		M12x1.5		1/4"
D1, D2, D3	SAE-10		M22x1.5		1/2"

Note A: SAE flanged ports conform to SAE J518
Note B: SAE o-ring port conforms to SAE 1926
Note C: Metric flanged ports conform to ISO 6162
Note D: Metric o-ring boss port conforms to ISO 6149-1
Note E: BSPP port conforms to ISO 228-1

Pump Installation - P1/PD-045 Side Port "L" or "AM" Control Option

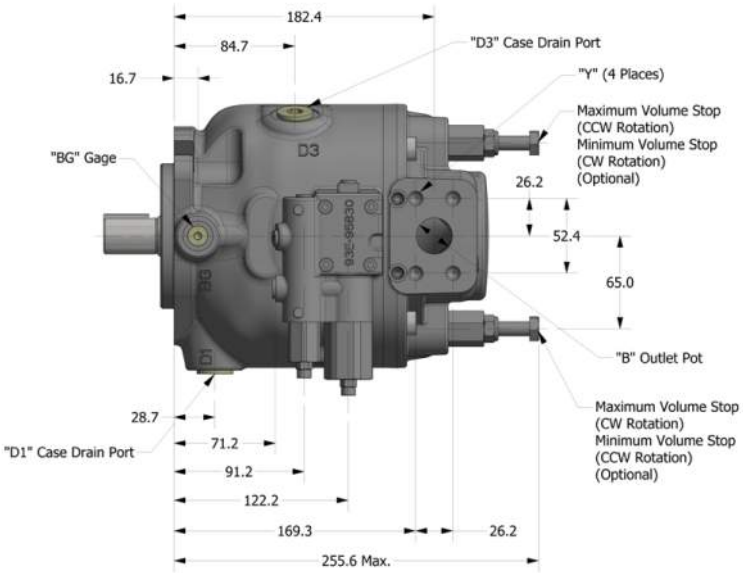

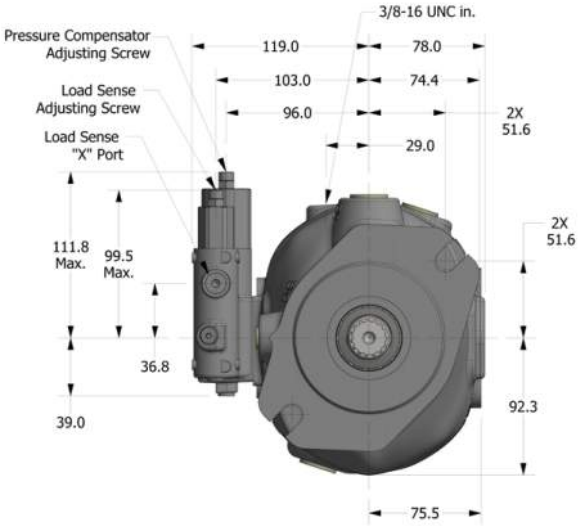

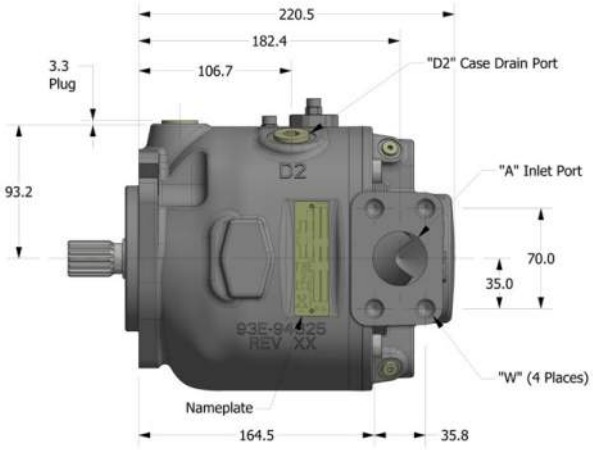

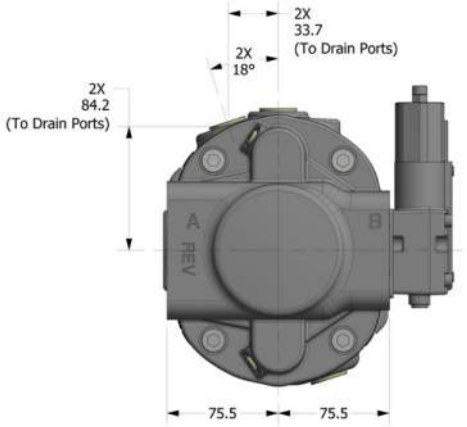

P1/PD-045 Port Sizes					
Ports	**SAE Flanged**	**SAE Threaded**	**Metric Flanged**	**Metric Threaded**	**BSPP**
"A" Inlet	1-1/2" Code 61	SAE-24	DN38	M48x2	-
W Threads	1/2-13 UNC-2B	-	M12x1.75-6H	-	-
"B" Outlet	1" Code 61	SAE-16	DN25	M33x2	-
Y Threads	3/8-16 UNC-28	-	M10x1.5-6H	-	-
BG, X	SAE-4		M12x1.5		1/4"
D1, D2, D3	SAE-10		M22x1.5		1/2"

Note A: SAE flanged ports conform to SAE J518
Note B: SAE o-ring port conforms to SAE 1926
Note C: Metric flanged ports conform to ISO 6162
Note D: Metric o-ring boss port conforms to ISO 6149-1
Note E: BSPP port conforms to ISO 228-1

Pump Installation - P1/PD-045 Side Ports with Thru-Drive "L" or "AM" Control Option

P1/PD-045 Port Sizes					
	SAE Flanged	**SAE Threaded**	**Metric Flanged**	**Metric Threaded**	**BSPP**
"A" Inlet	1-1/2" Code 61	SAE-24	DN38	M48x2	-
W Threads	1/2-13 UNC-2B	-	M12x1.75-6H	-	-
"B" Outlet	1" Code 61	SAE-16	DN25	M33x2	-
Y Threads	3/8-16 UNC-28	-	M10x1.5-6H	-	-
BG, X	SAE-4		M12x1.5		1/4"
D1, D2, D3	SAE-10		M22x1.5		1/2"

Note A: SAE flanged ports conform to SAE J518
Note B: SAE o-ring port conforms to SAE 1926
Note C: Metric flanged ports conform to ISO 6162
Note D: Metric o-ring boss port conforms to ISO 6149-1
Note E: BSPP port conforms to ISO 228-1

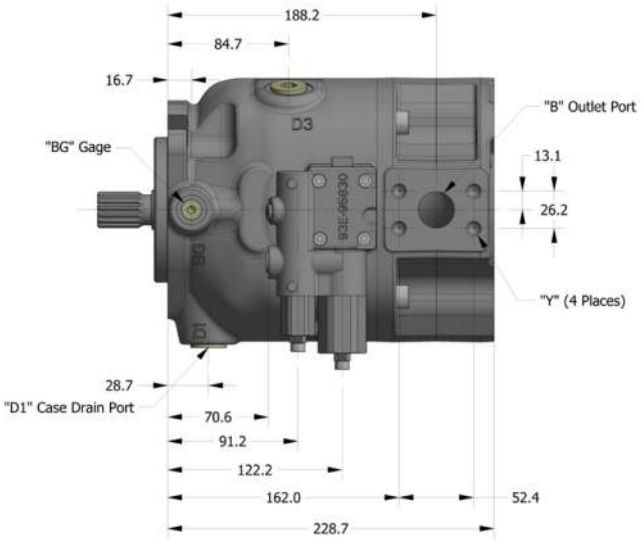

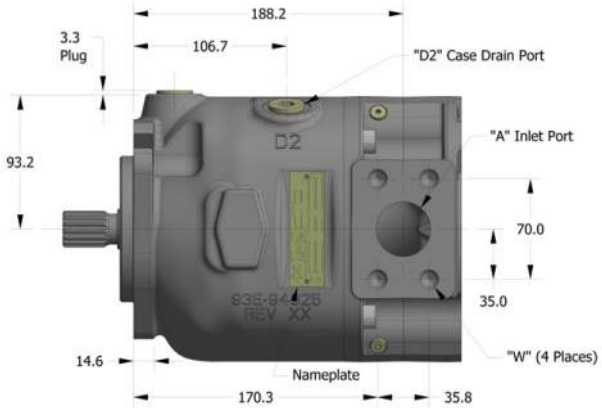

Thru-Drive Mounting Options

SAE-A Mounting Options Information	
Model Number T0*A Spline: ANSI B92.1 1996 SAE 16-4 (A) Involute Spline Class 7 Flat Root Side Fit Number of Teeth - 9 Pitch - 16/32 Pressure Angle - 30° Major Diameter - 13.06/12.93 mm Pitch Diameter - 14.29 mm	Model Number T0*H Spline: ANSI B92.1 1996 SAE 19-4 Involute Spline Class 7 Flat Root Side Fit Number of Teeth - 11 Pitch - 16/32 Pressure Angle - 30° Minor Diameter - 16.14/16.02 mm Pitch Diameter - 17.46 mm

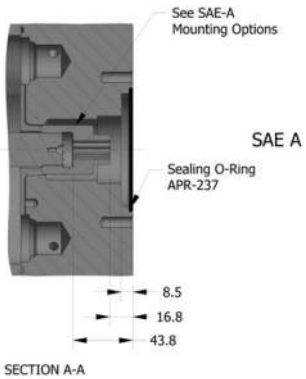

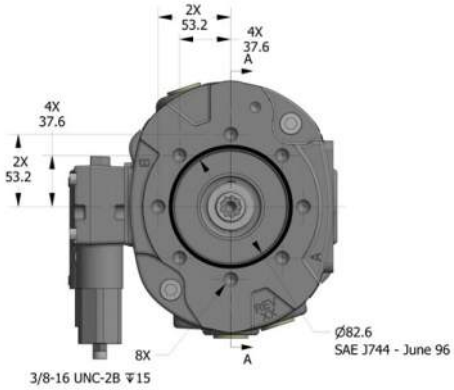

SAE-B Mounting Options Information	
Model Number T0*B Spline: ANSI B92.1 1996 SAE 22-4 (B) Involute Spline Class 7 Flat Root Side Fit Number of Teeth - 13 Pitch - 16/32 Pressure Angle - 30° Minor Diameter - 19.28/19.15 mm Pitch Diameter - 20.64 mm	Model Number T0*Q Spline: ANSI B92.1 1996 SAE 25-4 (B-B) Involute Spline Class 7 Flat Root Side Fit Number of Teeth - 15 Pitch - 16/32 Pressure Angle - 30° Minor Diameter - 22.40/22.28 mm Pitch Diameter - 23.81 mm

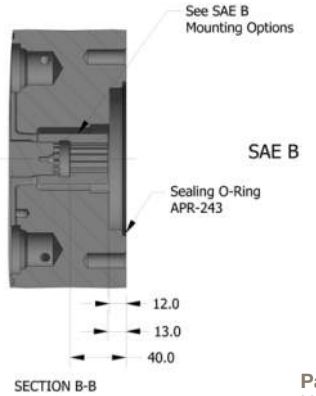

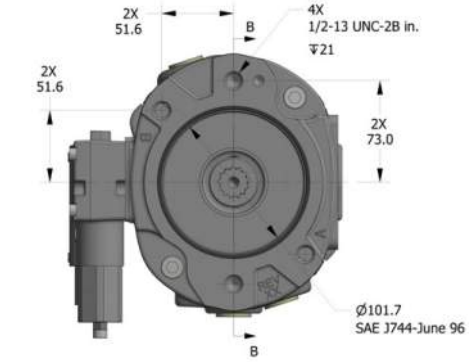

Parker Hannifin Corporation
Hydraulic Pump and Power Systems Division
United States

Pump Installation - P1/PD-060
Input Shaft Dimensions

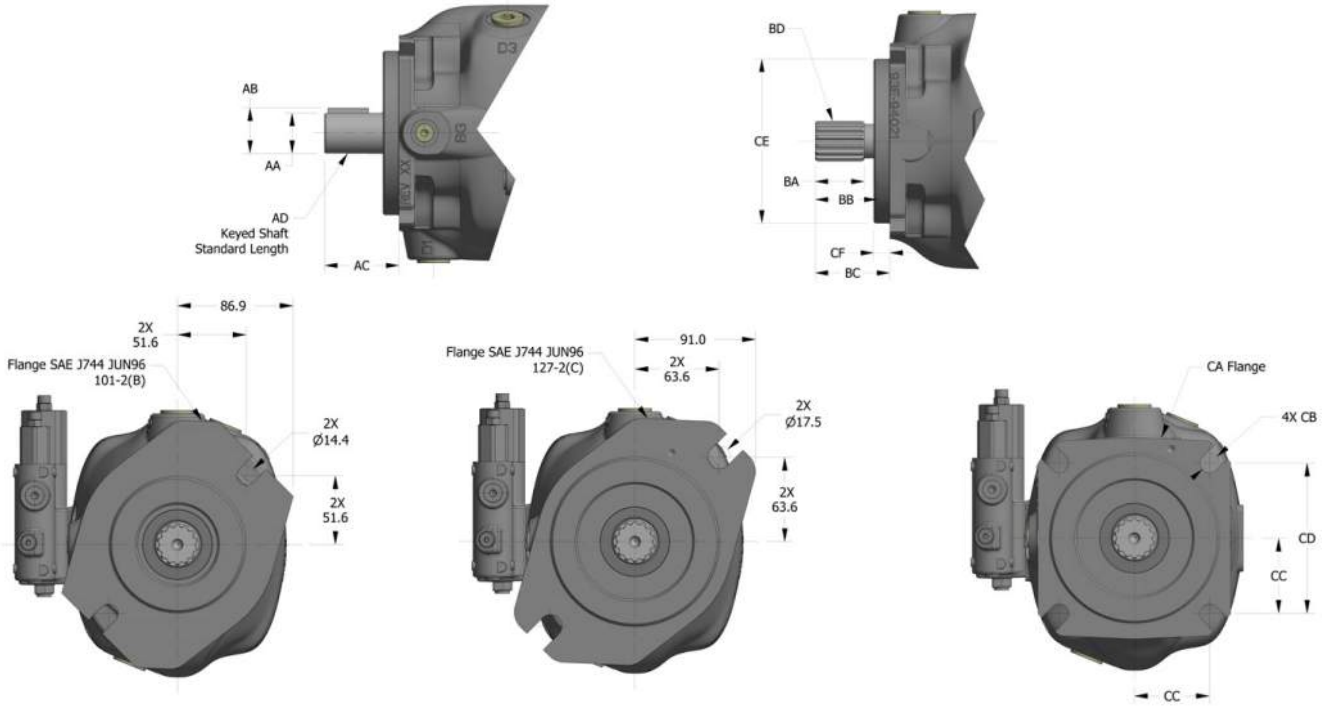

P1/PD-060 Mounting Flange & Shaft Dimensions				
Dimension	**ISO (Code 04)**	**SAE (Code 01 or 02)**	**SAE (Code 09)**	**SAE (Code 10)**
AA	32.03/32.00	31.75/31.70	N/A	N/A
AB	35.00/34.71	35.33/35.07	N/A	N/A
AC	67.0	56.0	N/A	N/A
AD	ISO 3019-2: E32N	SAE J744 32-1 (C)	N/A	N/A
BA	N/A	36.0	26.0	15.5
BB	N/A	48.0	38.0	33.0
BC	N/A	56.0	46.0	41.0
BD	N/A	SPLINE: ASA B5.15-1960 SAE 32-4 (C) INVOLUTE SPLINE CLASS 2 FLAT ROOT SIDE FIT NUMBER OF TEETH - 14 PITCH - 12/24 PRESSURE ANGLE - 30° MAJOR DIAMETER - 31.22/31.09 PITCH DIAMETER - 29.634	SPLINE: ANSI B92.1-1996 SAE 25-4 (B-B) INVOLUTE SPLINE CLASS 7 FLAT ROOT SIDE FIT NUMBER OF TEETH - 15 PITCH - 16/32 PRESSURE ANGLE - 30° MAJOR DIAMETER - 25.00/24.84 PITCH DIAMETER - 23.813	SPLINE: ANSI B92.1-1996 SAE 22-4 (B) INVOLUTE SPLINE CLASS 7 FLAT ROOT SIDE FIT NUMBER OF TEETH - 13 PITCH - 16/32 PRESSURE ANGLE - 30° MAJOR DIAMETER - 22.23/21.67 PITCH DIAMETER - 20.638
CA	ISO 3019-2: 125B4SW	SAE J744: JUN 96 127-4 (C)	SAE J744: JUN96 101-2 (B)	SAE J744: JUN96 101-2 (B)
CB	13.8/13.5	14.6/14.2	14.6/14.2	14.6/14.2
CC	56.6	56.8	N/A	N/A
CD	113.1 square	113.5 square	N/A	N/A
CE	125.00/124.94	127.00/126.95	101.60/101.55	101.60/101.55
CF	9.5/9.0	12.7/12.2	9.7/9.2	9.7/9.2
Keyway Width	10.01/9.96	8.00/7.95	N/A	N/A

Pump Installation - P1/PD-060
End Port
“L” or “AM” Control Option

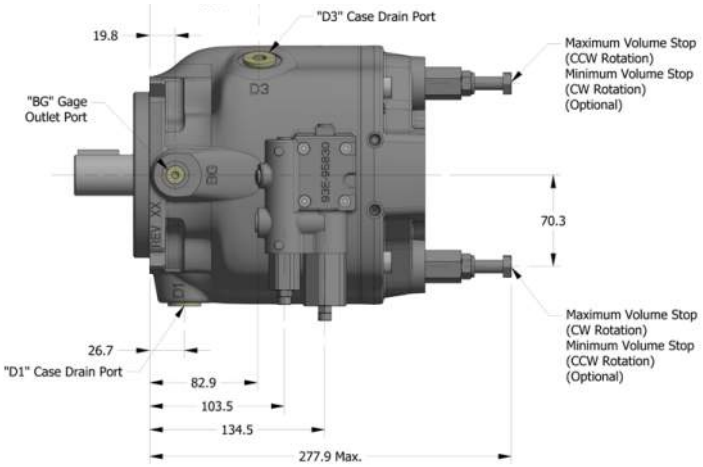

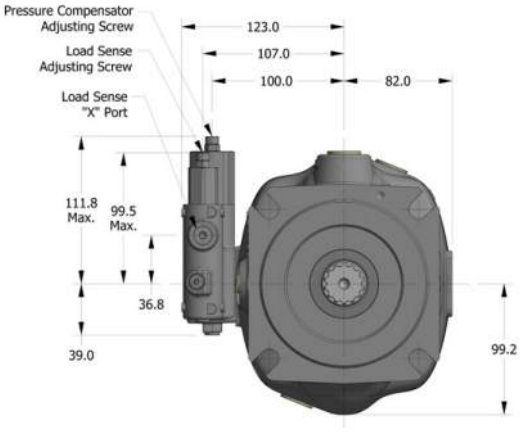

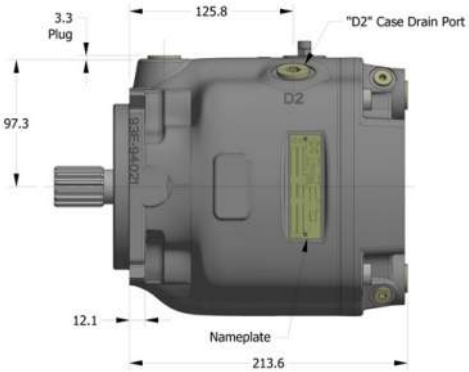

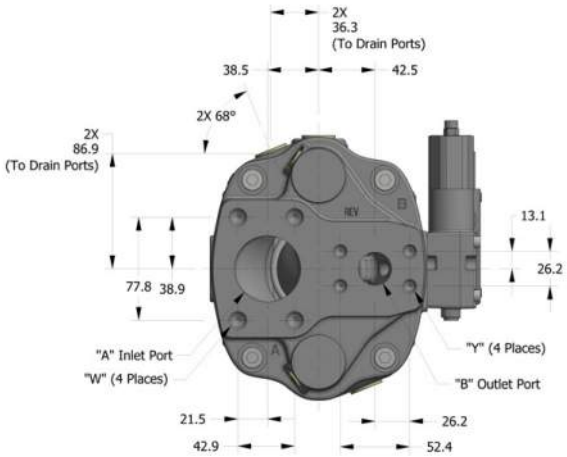

*Cannot use standard SAE Code 61 split flanges with the end ported option

P1/PD-060 Port Sizes				
Ports	**SAE Flanged**	**SAE Threaded**	**Metric Flanged**	**BSPP**
"A" Inlet	2" Code 61	2-1/2-12 UNF-2B	DN51	2"
W Threads	1/2-13 UNC-2B	-	M12x1.75-6H	-
"B" Outlet	1" Code 61	1-5/8-12 UNF-2B	DN25	1-1/4"
Y Threads	3/8-16 UNC-28	-	M10x1.5-6H	-
BG, X	SAE-4		M12x1.5	1/4"
D1, D2, D3	SAE-10		M22x1.5	3/4"

Note A: SAE flanged ports conform to SAE J518
Note B: SAE o-ring port conforms to SAE 1926
Note C: Metric flanged ports conform to ISO 6162
Note D: Metric o-ring boss port conforms to ISO 6149-1
Note E: BSPP port conforms to ISO 228-1

Pump Installation - P1/PD-060
Side Port
“L” or “AM” Control Option

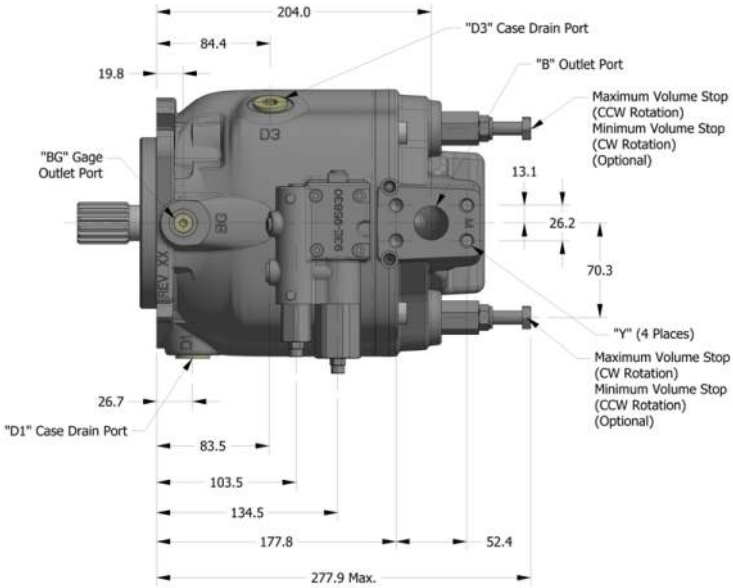

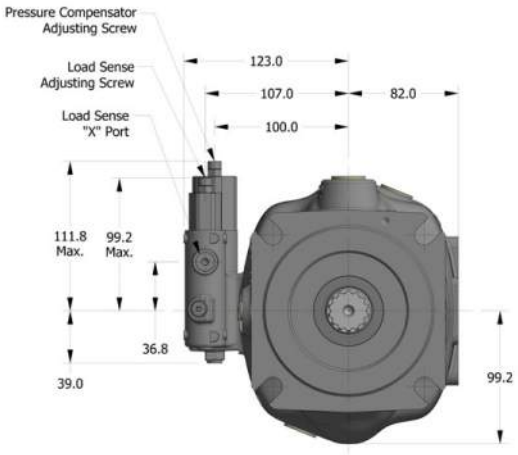

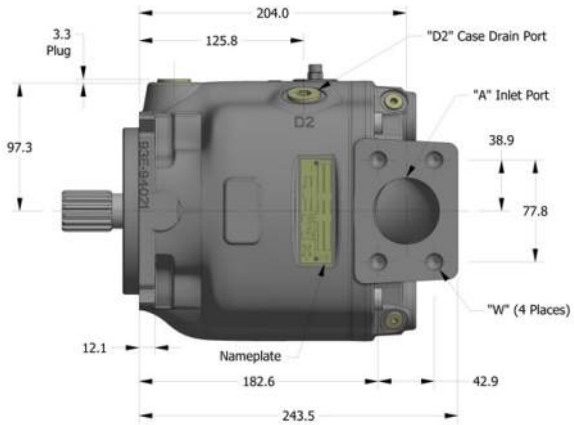

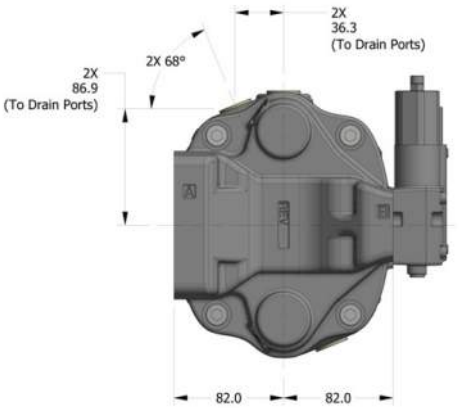

P1/PD-060 Port Sizes			
Ports	**SAE Flanged**	**Metric Flanged**	**BSPP**
"A" Inlet	2" Code 61	DN51	-
W Threads	1/2-13 UNC-2B	M12x1.75-6H	-
"B" Outlet	1" Code 61	DN25	-
Y Threads	3/8-16 UNC-28	M10x1.5-6H	-
BG, X	SAE-4	M12x1.5	1/4"
D1, D2, D3	SAE-10	M22x1.5	3/4"

Note A: SAE flanged ports conform to SAE J518
Note B: SAE o-ring port conforms to SAE 1926
Note C: Metric flanged ports conform to ISO 6162
Note D: Metric o-ring boss port conforms to ISO 6149-1
Note E: BSPP port conforms to ISO 228-1

Pump Installation - P1/PD-060 Side Ports with Thru-Drive "L" or "AM" Control Option

P1/PD-060 Port Sizes			
Ports	**SAE Flanged**	**Metric Flanged**	**BSPP**
"A" Inlet	2" Code 61	DN51	-
W Threads	1/2-13 UNC-2B	M12x1.75-6H	-
"B" Outlet	1" Code 61	DN25	-
Y Threads	3/8-16 UNC-28	M10x1.5-6H	-
BG, X	SAE-4	M12x1.5	1/4"
D1, D2, D3	SAE-10	M22x1.5	3/4"

Note A: SAE flanged ports conform to SAE J518
Note B: SAE o-ring port conforms to SAE 1926
Note C: Metric flanged ports conform to ISO 6162
Note D: Metric o-ring boss port conforms to ISO 6149-1
Note E: BSPP port conforms to ISO 228-1

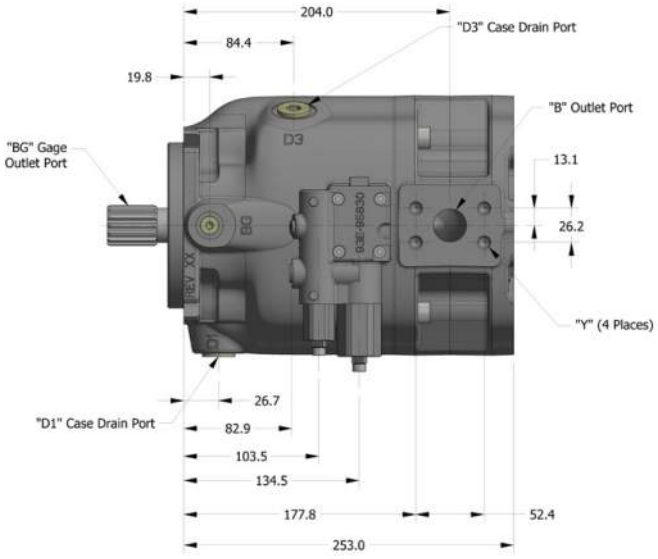

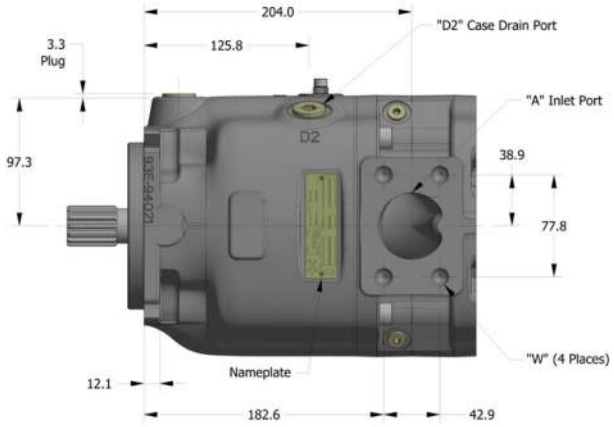

Pump Installation - P1/PD-060 Side Ports with Thru-Drive Mounting Options

SAE-A

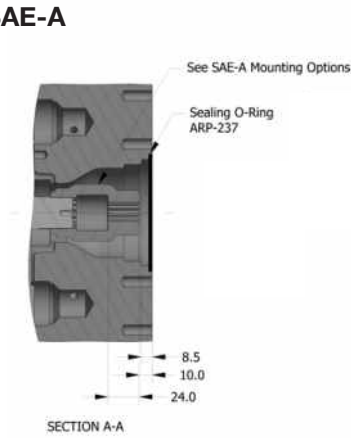

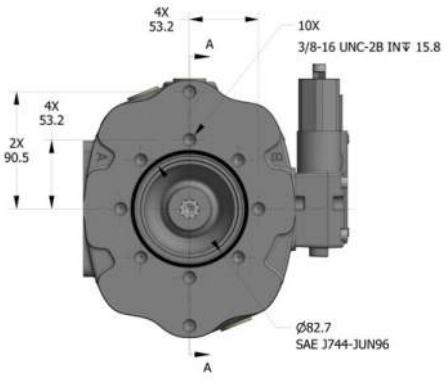

SAE-A Mounting Options Information
Model Number T0*A Spline: ANSI B92.1 1996 SAE 16-4 (A) Involute Spline Class 7 Flat Root Side Fit Number of Teeth - 9 Pitch - 16/32 Pressure Angle - 30° Major Diameter - 13.06/12.93 mm Pitch Diameter - 14.29 mm
Model Number T0*H Spline: ANSI B92.1 1996 SAE 19-4 Involute Spline Class 7 Flat Root Side Fit Number of Teeth - 11 Pitch - 16/32 Pressure Angle - 30° Minor Diameter - 16.14/16.02 mm Pitch Diameter - 17.46 mm

SAE-B

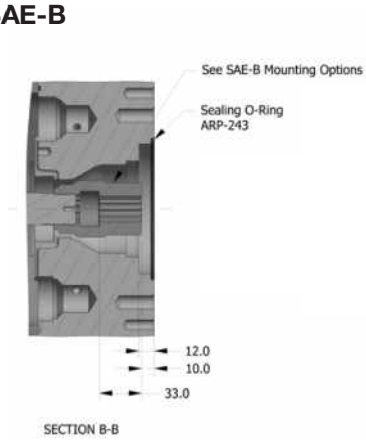

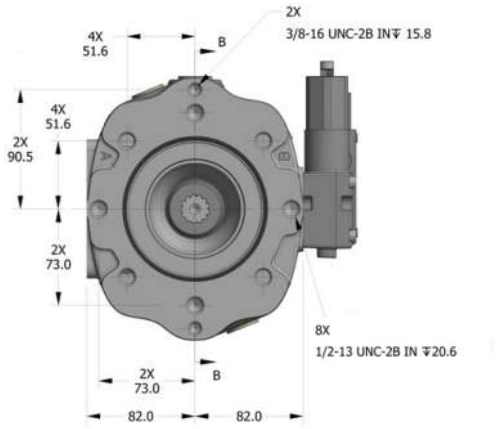

SAE-B Mounting Options Information
Model Number T0*B Spline: ANSI B92.1 1996 SAE 22-4 (B) Involute Spline Class 7 Flat Root Side Fit Number of Teeth - 13 Pitch - 16/32 Pressure Angle - 30° Minor Diameter - 19.28/19.15 mm Pitch Diameter - 20.64 mm
Model Number T0*Q Spline: ANSI B92.1 1996 SAE 25-4 (B-B) Involute Spline Class 7 Flat Root Side Fit Number of Teeth - 15 Pitch - 16/32 Pressure Angle - 30° Minor Diameter - 22.40/22.28 mm Pitch Diameter - 23.81 mm

SAE-C

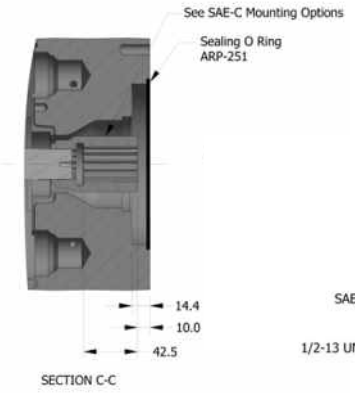

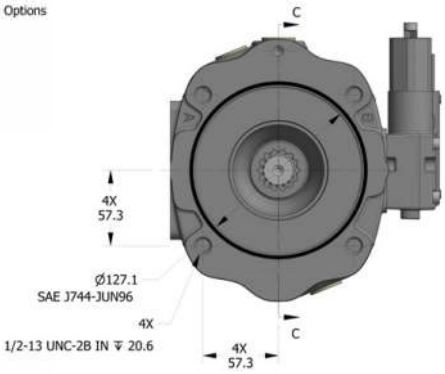

SAE-C Mounting Options Information
Model Number T0*C Spline: ANSI B92.1 1996 SAE 32-4 (C) Involute Spline Class 2 Flat Root Side Fit Number of Teeth - 14 Pitch - 12/24 Pressure Angle - 30° Minor Diameter - 27.74/27.61 mm Pitch Diameter - 29.63 mm

Pump Installation - P1/PD-075 & 085
Input Shafts

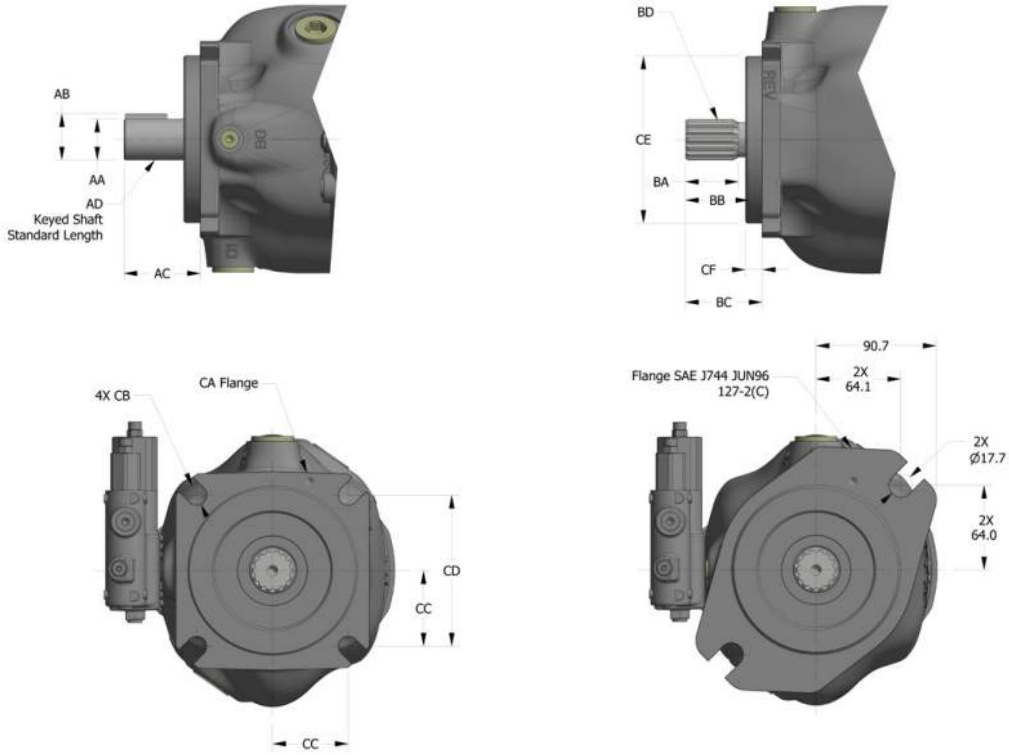

P1/PD-075 & 085 Mounting Flange & Shaft Dimensions		
Dimension	**ISO (Code 04)**	**SAE (Code 01 or 02)**
AA	32.03/32.00	31.75/31.70
AB	35.00/34.71	35.33/35.07
AC	68.0	56.0
AD	ISO 3019-2: E32N	SAE J744 32-1 (C)
BA	N/A	36.0
BB	N/A	48.0
BC	N/A	56.0
BD	N/A	SPLINE: ASA B5.15-1960 SAE 32-4 (C) INVOLUTE SPLINE CLASS 1 FLAT ROOT SIDE FIT NUMBER OF TEETH - 14 PITCH - 12/24 PRESSURE ANGLE - 30° MAJOR DIAMETER - 31.22/31.09 PITCH DIAMETER - 29.634
CA	ISO 3019-2: 125B4SW	SAE J744: JUN 96 127-4 (C)
CB	13.8/13.5	14.6/14.2
CC	56.6	56.8
CD	113.1 square	113.5 square
CE	125.00/124.95	127.00/126.95
CF	9.5/9.0	12.7/12.2
Keyway Width	10.01/9.96	8.00/7.95

Pump Installation - P1/PD-075 & 085
End Port
“L” or “AM” Control Option

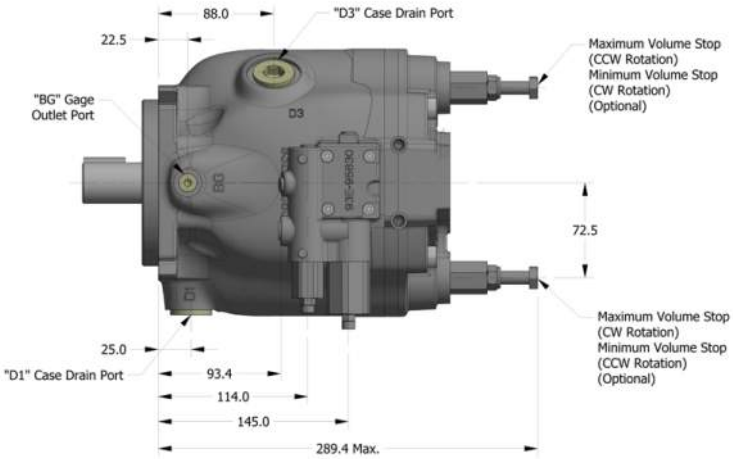

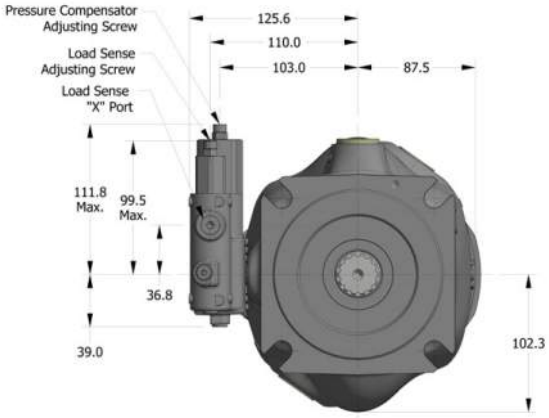

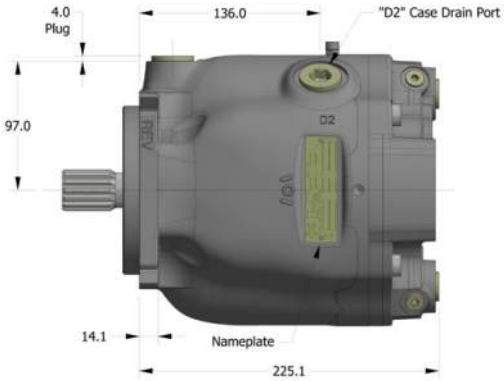

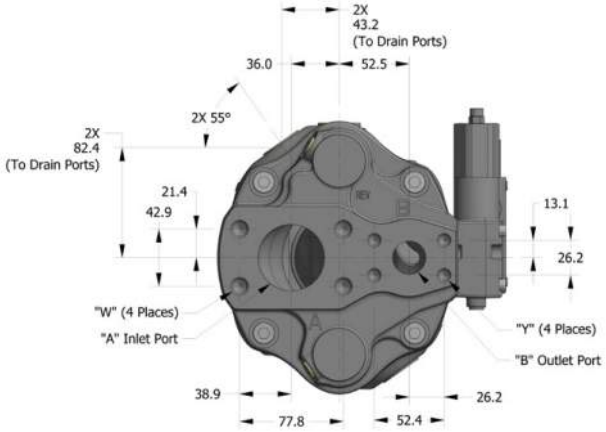

P1/PD-075 & 085 Port Sizes			
Ports	**SAE Flanged**	**Metric Flanged**	**BSPP**
"A" Inlet	2" Code 61	DN51	-
W Threads	1/2-13 UNC-2B	M12x1.75-6H	-
"B" Outlet	1" Code 61	DN25	-
Y Threads	3/8-16 UNC-28	M10x1.5-6H	-
BG, X	SAE-4	M12x1.5	1/4"
D1, D2, D3	SAE-12	M27x2	3/4"

Note A: SAE flanged ports conform to SAE J518
Note B: SAE o-ring port conforms to SAE 1926
Note C: Metric flanged ports conform to ISO 6162
Note D: Metric o-ring boss port conforms to ISO 6149-1
Note E: BSPP port conforms to ISO 228-1

Pump Installation - P1/PD-075 & 085
Side Port
“L” or “AM” Control Option

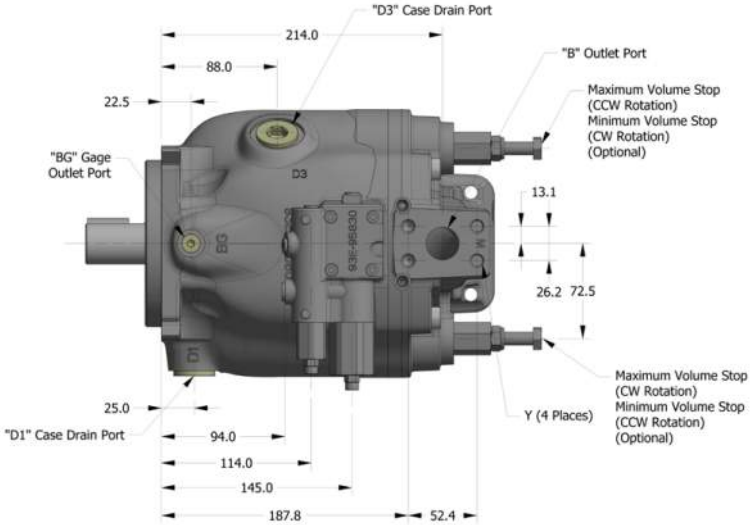

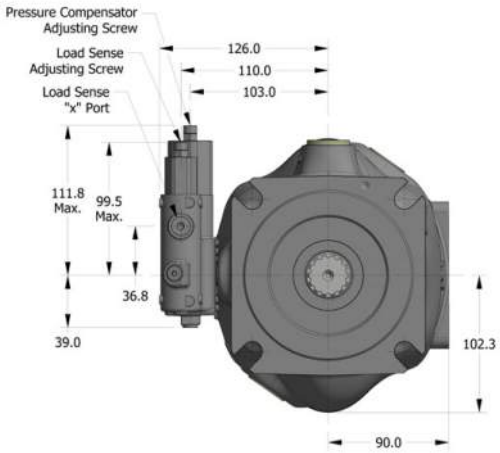

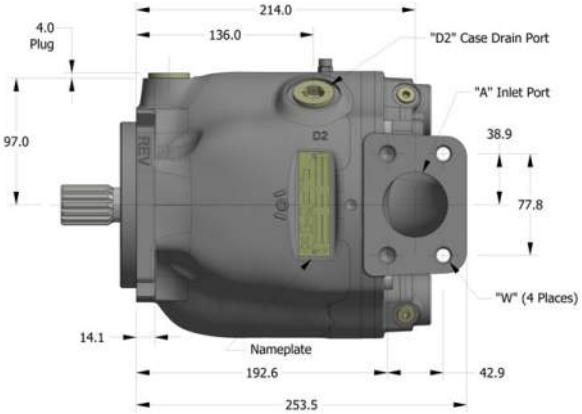

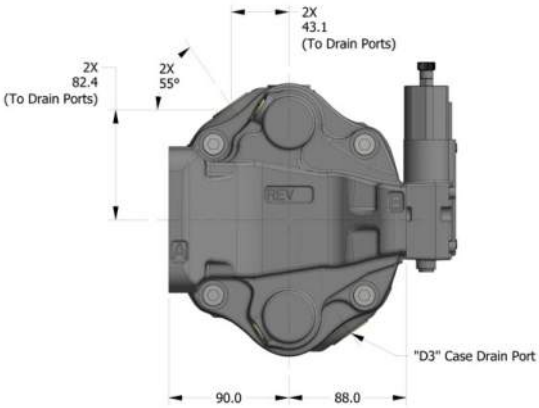

P1/PD-075 & 085 Port Sizes			
Ports	**SAE Flanged**	**Metric Flanged**	**BSPP**
"A" Inlet	2" Code 61	DN51	-
W Threads	1/2-13 UNC-2B	M12x1.75-6H	-
"B" Outlet	1" Code 61	DN25	-
Y Threads	3/8-16 UNC-28	M10x1.5-6H	-
BG, X	SAE-4	M12x1.5	1/4"
D1, D2, D3	SAE-12	M27x2	3/4"

Note A: SAE flanged ports conform to SAE J518
Note B: SAE o-ring port conforms to SAE 1926
Note C: Metric flanged ports conform to ISO 6162
Note D: Metric o-ring boss port conforms to ISO 6149-1
Note E: BSPP port conforms to ISO 228-1

Pump Installation - P1/PD-075 & 085 Side Ports with Thru-Drive "L" or "AM" Control Option

P1/PD-075 & 085 Port Sizes			
Ports	**SAE Flanged**	**Metric Flanged**	**BSPP**
"A" Inlet	2" Code 61	DN51	-
W Threads	1/2-13 UNC-2B	M12x1.75-6H	-
"B" Outlet	1" Code 61	DN25	-
Y Threads	3/8-16 UNC-28	M10x1.5-6H	-
BG, X	SAE-4	M12x1.5	1/4"
D1, D2, D3	SAE-12	M27x2	3/4"

Note A: SAE flanged ports conform to SAE J518
Note B: SAE o-ring port conforms to SAE 1926
Note C: Metric flanged ports conform to ISO 6162
Note D: Metric o-ring boss port conforms to ISO 6149-1
Note E: BSPP port conforms to ISO 228-1

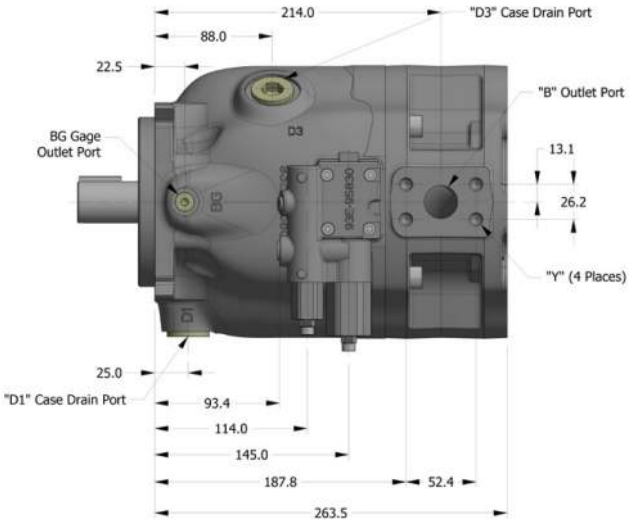

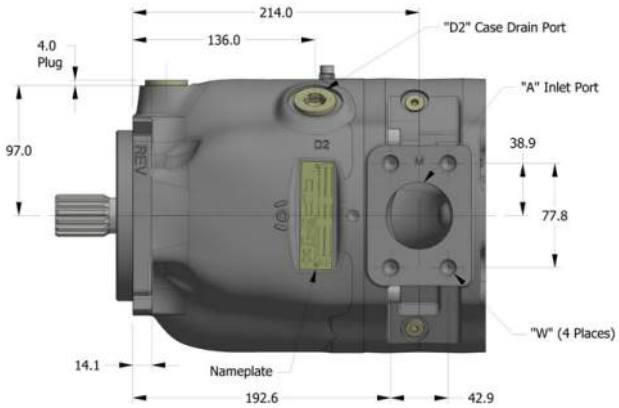

Pump Installation - P1/PD-075 & 085 Side Ports with Thru-Drive Mounting Options

SAE-A

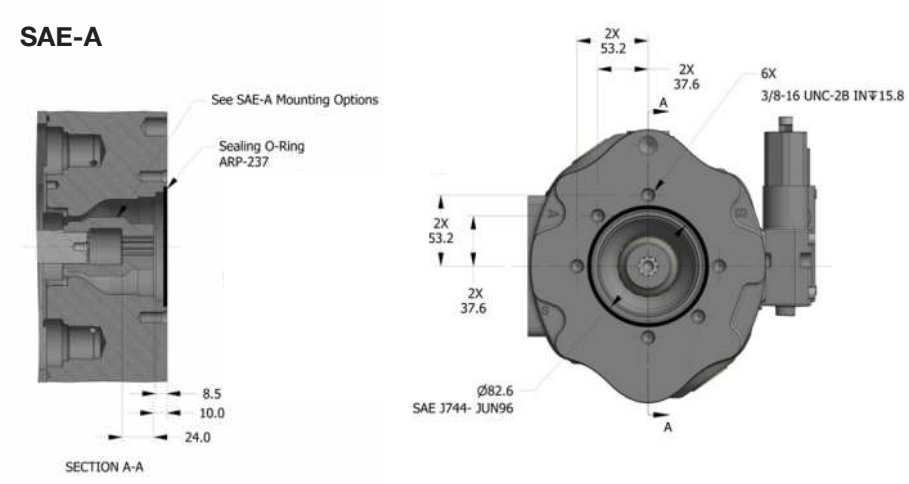

SAE-A Mounting Options Information
Model Number T0*A Spline: ANSI B92.1 1996 SAE 16-4 (A) Involute Spline Class 5 Flat Root Side Fit Number of Teeth - 9 Pitch - 16/32 Pressure Angle - 30° Major Diameter - 13.06/12.93 mm Pitch Diameter - 14.29 mm
Model Number T0*H Spline: ANSI B92.1 1996 SAE 19-4 Involute Spline Class 5 Flat Root Side Fit Number of Teeth - 11 Pitch - 16/32 Pressure Angle - 30° Minor Diameter - 16.14/16.02 mm Pitch Diameter - 17.46 mm

SAE-B

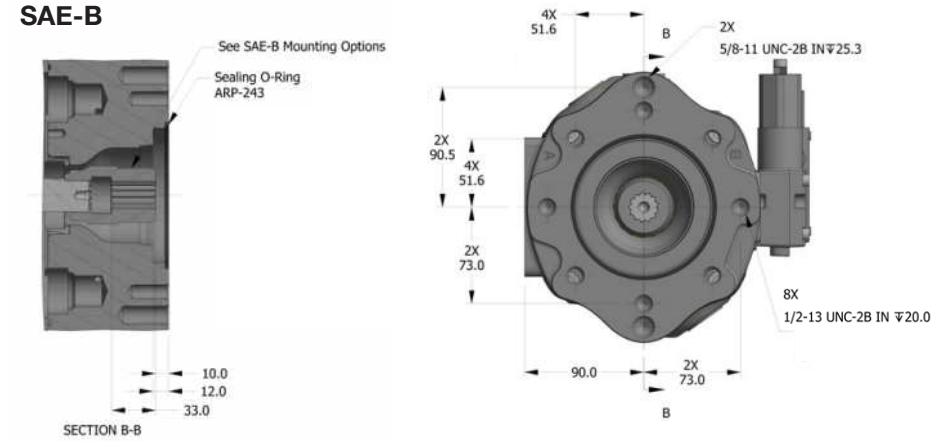

SAE-B Mounting Options Information
Model Number T0*B Spline: ANSI B92.1 1996 SAE 22-4 (B) Involute Spline Class 5 Flat Root Side Fit Number of Teeth - 13 Pitch - 16/32 Pressure Angle - 30° Minor Diameter - 19.28/19.15 mm Pitch Diameter - 20.64 mm
Model Number T0*Q Spline: ANSI B92.1 1996 SAE 25-4 (B-B) Involute Spline Class 5 Flat Root Side Fit Number of Teeth - 15 Pitch - 16/32 Pressure Angle - 30° Minor Diameter - 22.40/22.28 mm Pitch Diameter - 23.81 mm

SAE-C

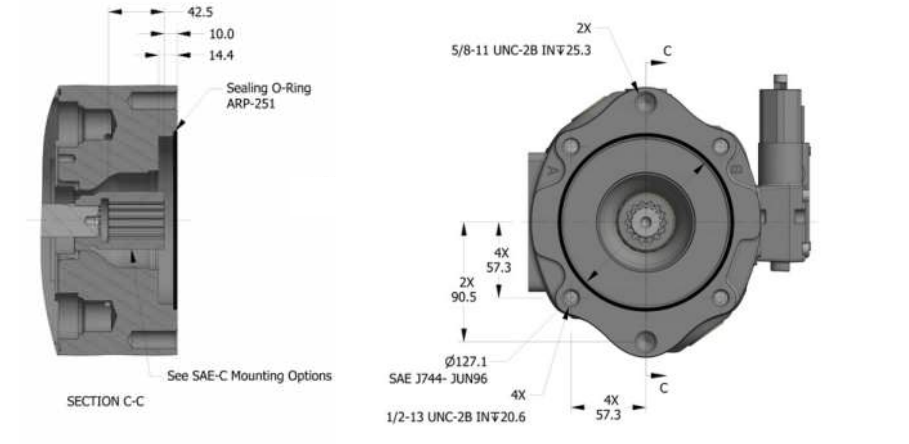

SAE-C Mounting Options Information
Model Number T0*C Spline: ANSI B92.1 1996 SAE 32-4 (C) Involute Spline Class 1 Flat Root Side Fit Number of Teeth - 14 Pitch - 12/24 Pressure Angle - 30° Minor Diameter - 27.74/27.61 mm Pitch Diameter - 29.63 mm

Pump Installation - P1/PD-100
Input Shafts

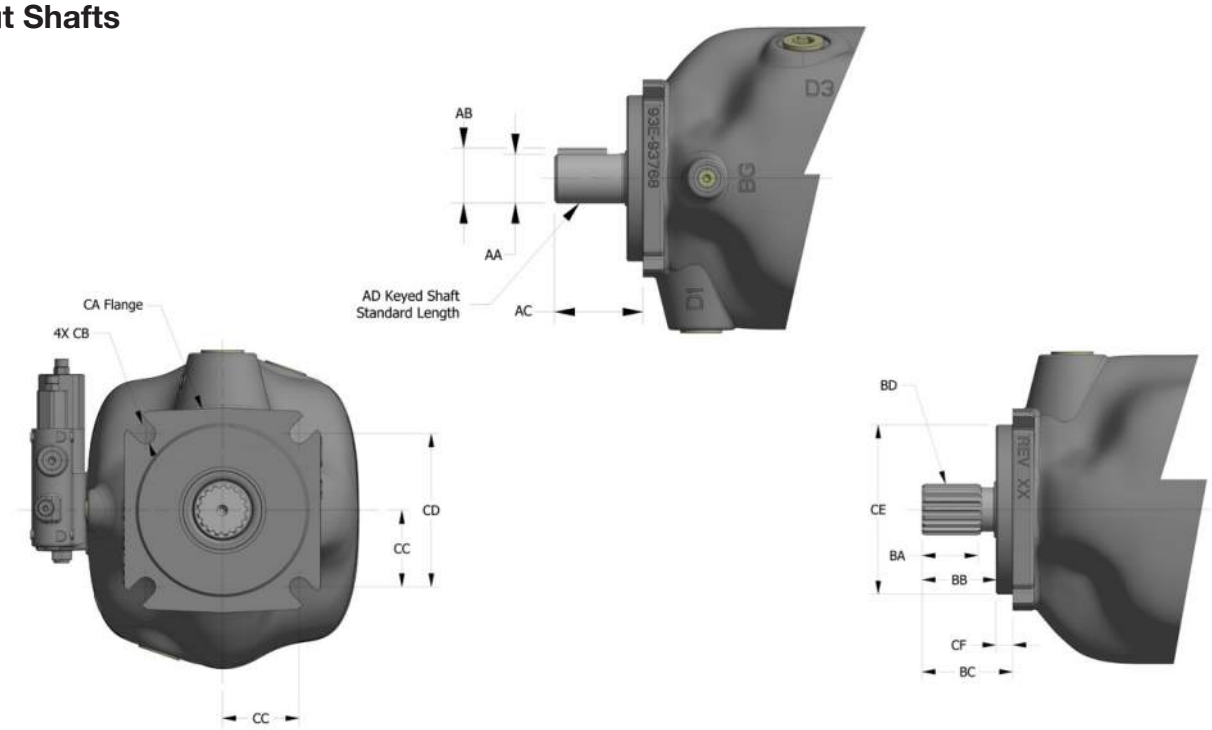

P1/PD-100 Mounting Flange & Shaft Dimensions			
Dimension	**ISO (Code 04)**	**SAE (Code 01 or 02)**	**SAE (Code 06)**
AA	40.03/40.00	38.10/38.05	N/A
AB	43.00/42.71	42.35/42.17	N/A
AC	92.6	62.3	N/A
AD	ISO 3019-2: E40N	SAE J744 38-1 (C-C)	N/A
BA	N/A	42.1	38.0
BB	N/A	54.0	48.0
BC	N/A	62.3	56.0
BD	N/A	SPLINE: ASA-B5.15-1960 SAE 38-4 (C-C) INVOLUTE SPLINE CLASS 1 FLAT ROOT SIDE FIT NUMBER OF TEETH - 17 PITCH - 12/24 PRESSURE ANGLE - 30 MAJOR DIAMETER - 37.57/37.44 PITCH DIAMETER - 35.984	SPLINE: ASA-B5.15-1960 SAE 32-4 (C) INVOLUTE SPLINE CLASS 1 FLAT ROOT SIDE FIT NUMBER OF TEETH - 14 PITCH - 12/24 PRESSURE ANGLE - 30 MAJOR DIAMETER - 31.22/31.09 PITCH DIAMETER - 29.634
CA	ISO 3019-2: 125B4SW	SAE J744: JUN 96 127-4 (C)	SAE 744: JUN 96 127-4 (C)
CB	13.8/13.5	14.6/14.2	14.6/14.2
CC	56.6	56.8	56.8
CD	113.1 square	113.5 square	113.5 square
CE	125.00/124.95	127.00/126.95	127.00/126.95
CF	9.5/9.0	12.7/12.2	12.7/12.2
Keyway Width	12.01/11.96	9.58/9.53	8.00/7.95

Pump Installation - P1/PD-100
End Ports
“L” or “AM” Control Option

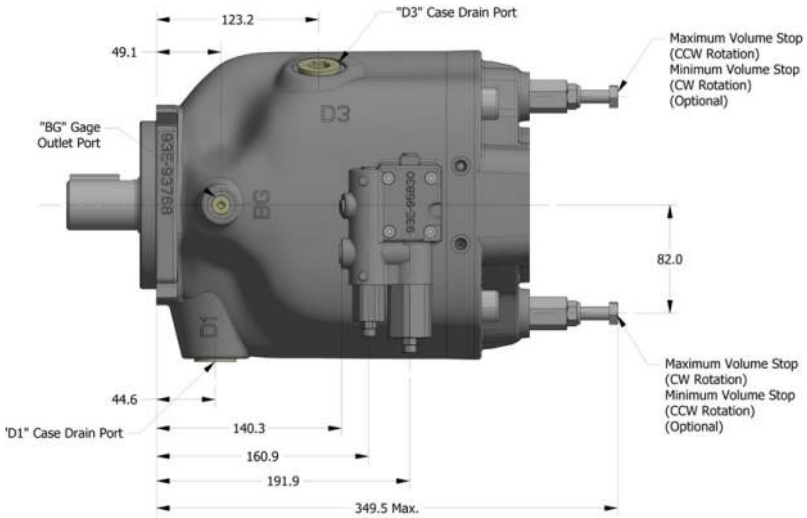

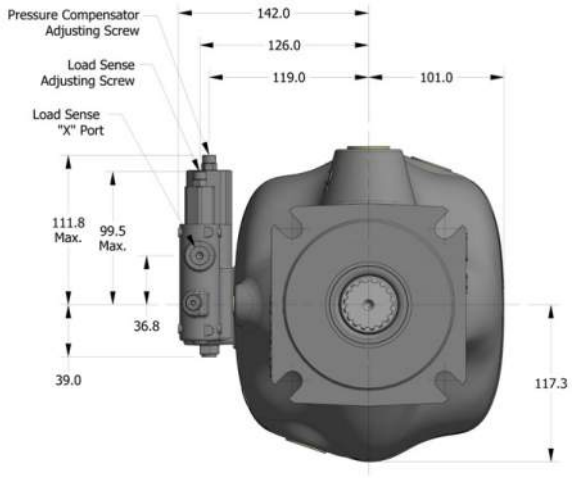

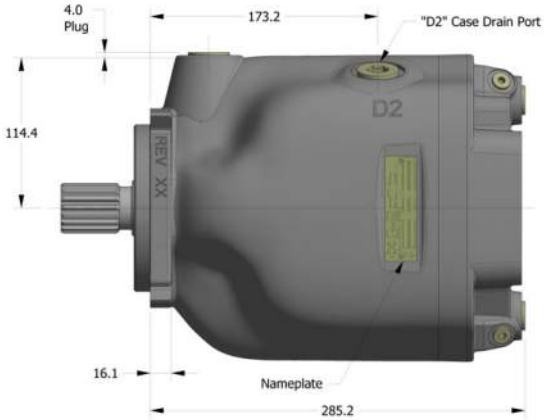

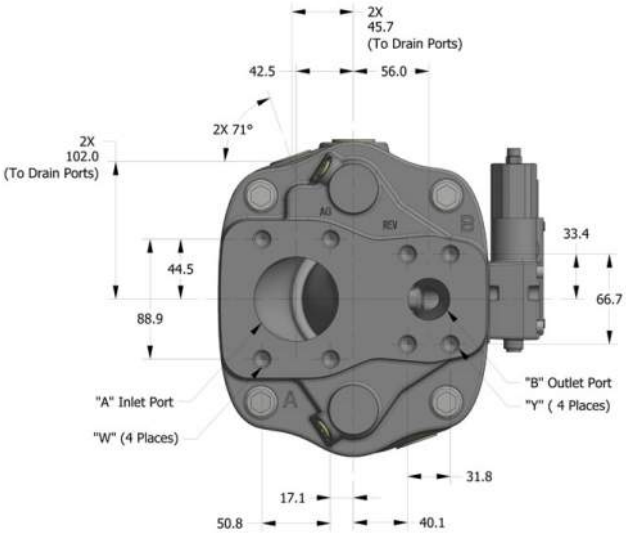

P1/PD-100 Port Sizes			
Ports	**SAE Flanged**	**Metric Flanged**	**BSPP**
"A" Inlet	2-1/2" Code 61	DN63	-
W Threads	1/2-13 UNC-2B	M12x1.75-6H	-
"B" Outlet	1-1/4" Code 62	DN32	-
Y Threads	1/2-13 UNC-28	M12x1.75-6H	-
BG, X	SAE-4	M12x1.5	1/4"
D1, D2, D3	SAE-12	M27x2	3/4"

Note A: SAE flanged ports conform to SAE J518
Note B: SAE o-ring port conforms to SAE 1926
Note C: Metric flanged ports conform to ISO 6162
Note D: Metric o-ring boss port conforms to ISO 6149-1
Note E: BSPP port conforms to ISO 228-1

Pump Installation - P1/PD-100 Side Ports "L" or "AM" Control Option

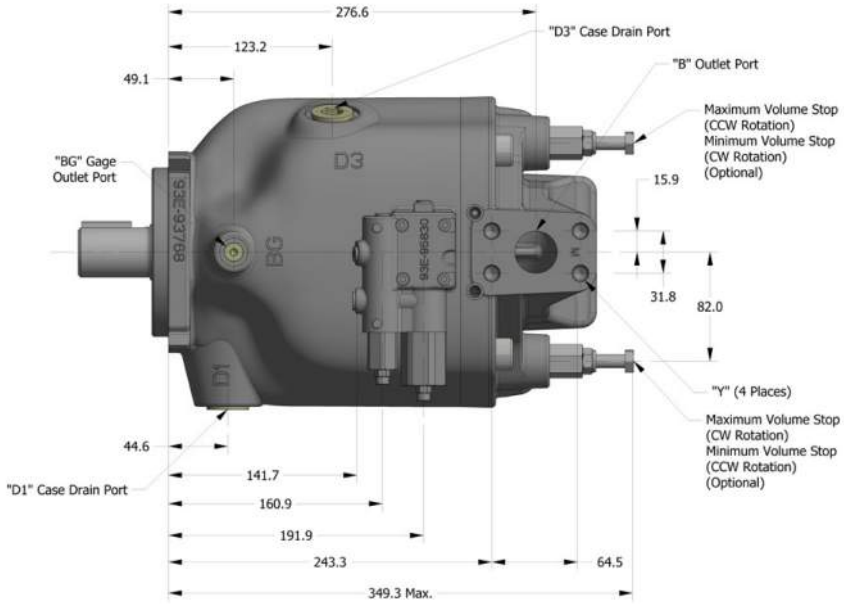

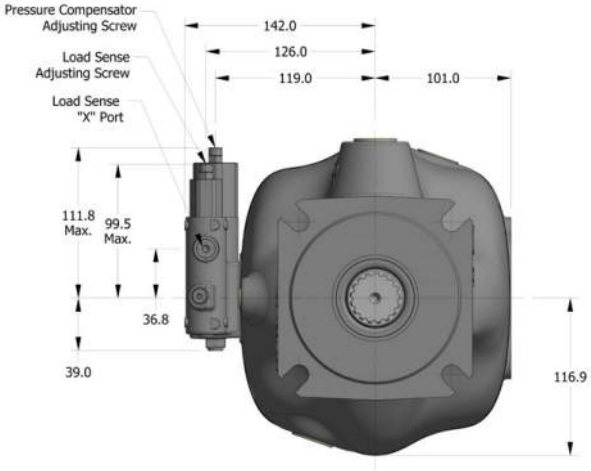

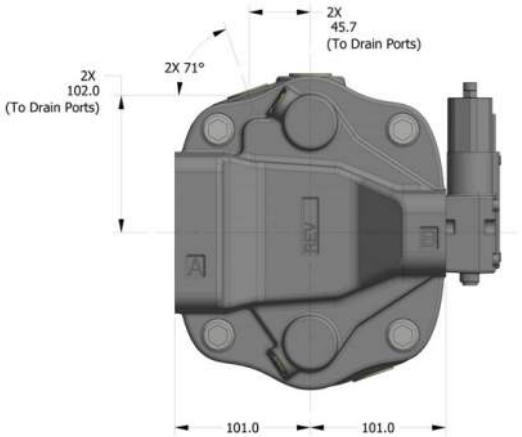

P1/PD-100 Port Sizes			
Ports	**SAE Flanged**	**Metric Flanged**	**BSPP**
"A" Inlet	2-1/2" Code 61	DN63	-
W Threads	1/2-13 UNC-2B	M12x1.75-6H	-
"B" Outlet	1-1/4" Code 62	DN32	-
Y Threads	1/2-13 UNC-28	M12x1.75-6H	-
BG, X	SAE-4	M12x1.5	1/4"
D1, D2, D3	SAE-12	M27x2	3/4"

Note A: SAE flanged ports conform to SAE J518
Note B: SAE o-ring port conforms to SAE 1926
Note C: Metric flanged ports conform to ISO 6162
Note D: Metric o-ring boss port conforms to ISO 6149-1
Note E: BSPP port conforms to ISO 228-1

Pump Installation - P1/PD-100 Side Ports with Thru-Drive "L" or "AM" Control Option

P1/PD-100 Port Sizes			
Ports	**SAE Flanged**	**Metric Flanged**	**BSPP**
"A" Inlet	2-1/2" Code 61	DN63	-
W Threads	1/2-13 UNC-2B	M12x1.75-6H	-
"B" Outlet	1-1/4" Code 62	DN32	-
Y Threads	1/2-13 UNC-28	M12x1.75-6H	-
BG, X	SAE-4	M12x1.5	1/4"
D1, D2, D3	SAE-12	M27x2	3/4"

Note A: SAE flanged ports conform to SAE J518
Note B: SAE o-ring port conforms to SAE 1926
Note C: Metric flanged ports conform to ISO 6162
Note D: Metric o-ring boss port conforms to ISO 6149-1
Note E: BSPP port conforms to ISO 228-1

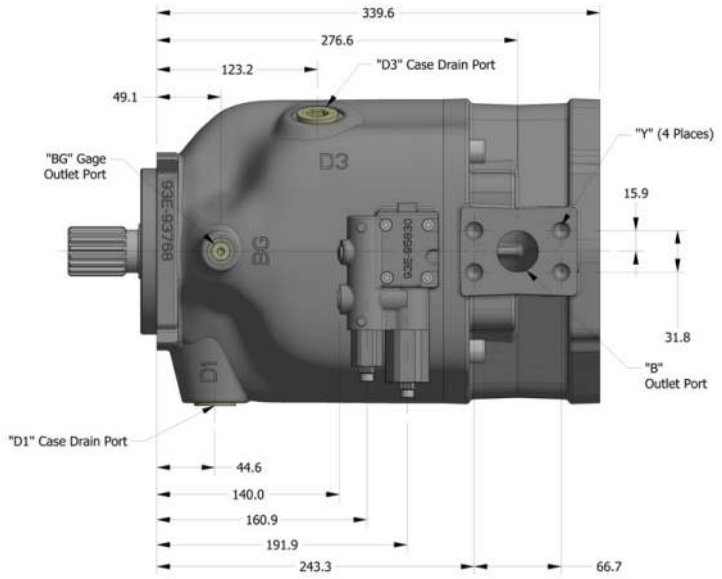

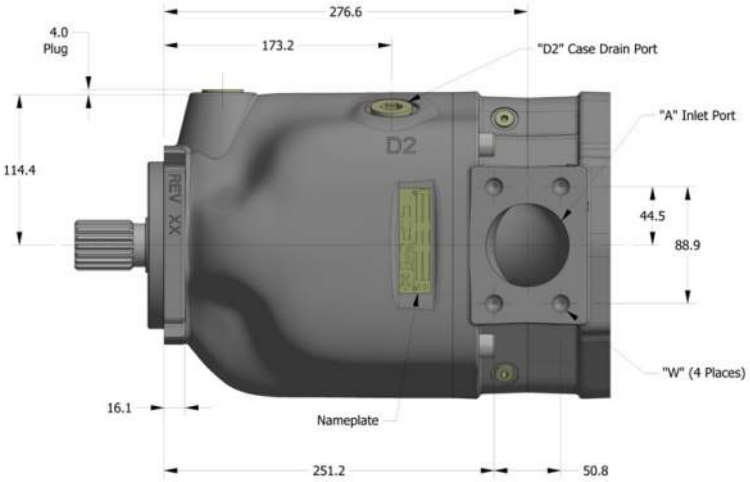

Parker Hannifin Corporation
Hydraulic Pump and Power Systems Division
United States

Pump Installation - P1/PD-100 Side Ports with Thru-Drive Mounting Options

SAE-A

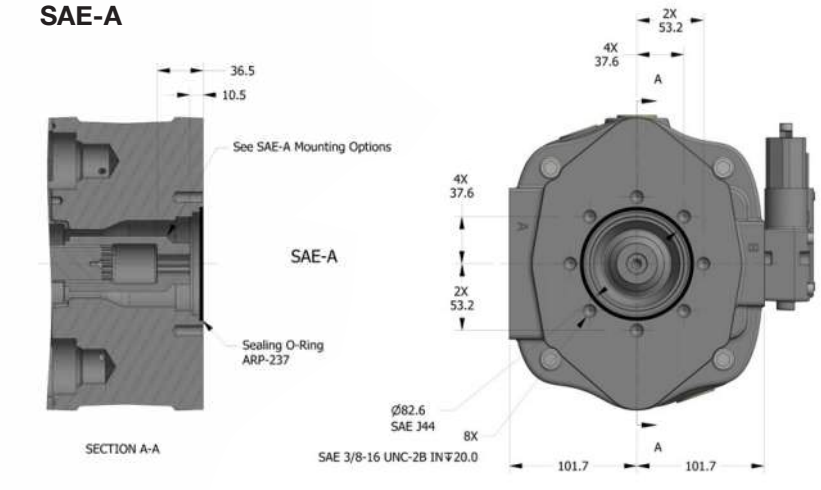

SAE-A Mounting Options Information
Model Number T0*A Spline: ANSI B92.1 1996 SAE 16-4 (A) Involute Spline Class 5 Flat Root Side Fit Number of Teeth - 9 Pitch - 16/32 Pressure Angle - 30° Major Diameter - 13.06/12.93 mm Pitch Diameter - 14.29 mm
Model Number T0*H Spline: ANSI B92.1 1996 SAE 19-4 Involute Spline Class 5 Flat Root Side Fit Number of Teeth - 11 Pitch - 16/32 Pressure Angle - 30° Minor Diameter - 16.14/16.02 mm Pitch Diameter - 17.46 mm

SAE-B

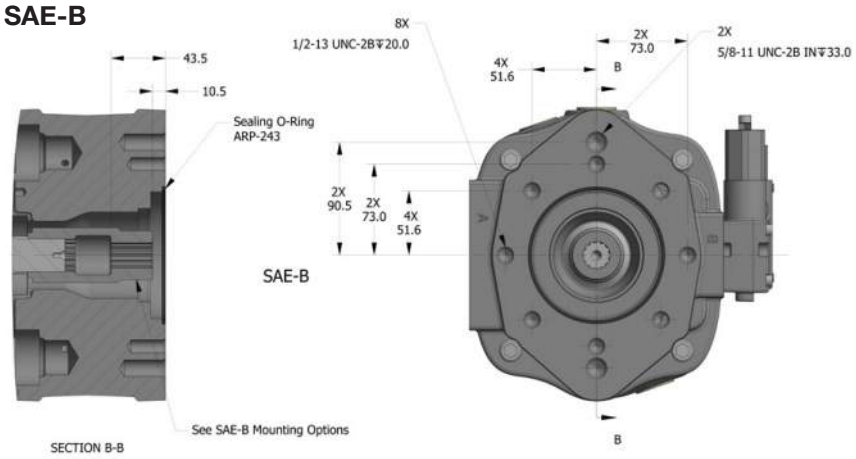

SAE-B Mounting Options Information
Model Number T0*B Spline: ANSI B92.1 1996 SAE 22-4 (B) Involute Spline Class 5 Flat Root Side Fit Number of Teeth - 13 Pitch - 16/32 Pressure Angle - 30° Minor Diameter - 19.28/19.15 mm Pitch Diameter - 20.64 mm
Model Number T0*Q Spline: ANSI B92.1 1996 SAE 25-4 (B-B) Involute Spline Class 5 Flat Root Side Fit Number of Teeth - 15 Pitch - 16/32 Pressure Angle - 30° Minor Diameter - 22.40/22.28 mm Pitch Diameter - 23.81 mm

SAE-C

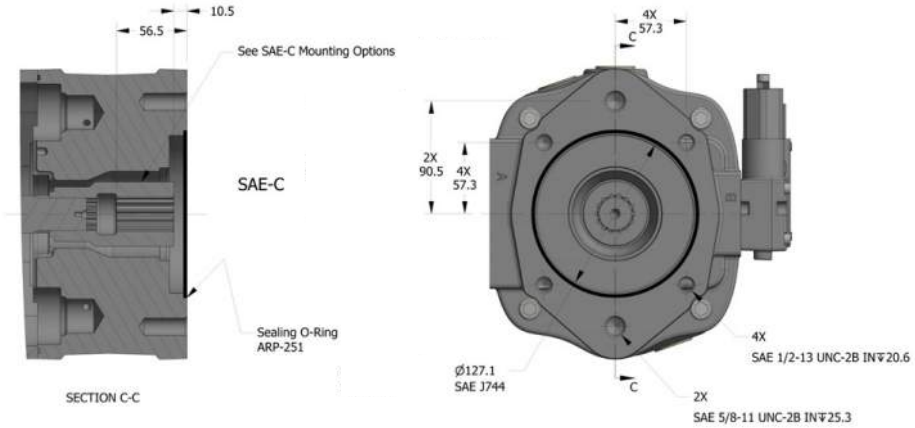

SAE-C Mounting Options Information
Model Number T0*C Spline: ANSI B92.1 1996 SAE 32-4 (C) Involute Spline Class 1 Flat Root Side Fit Number of Teeth - 14 Pitch - 12/24 Pressure Angle - 30° Minor Diameter - 27.74/27.61 mm Pitch Diameter - 29.63 mm
Model Number T0*N Spline: ANSI B92.1 1996 SAE 38-4 (C-C) Involute Spline Class 1 Flat Root Side Fit Number of Teeth - 17 Pitch - 12/24 Pressure Angle - 30° Minor Diameter - 34.01/33.88 mm Pitch Diameter - 35.98 mm

Pump Installation - P1/PD-140
Input Shafts

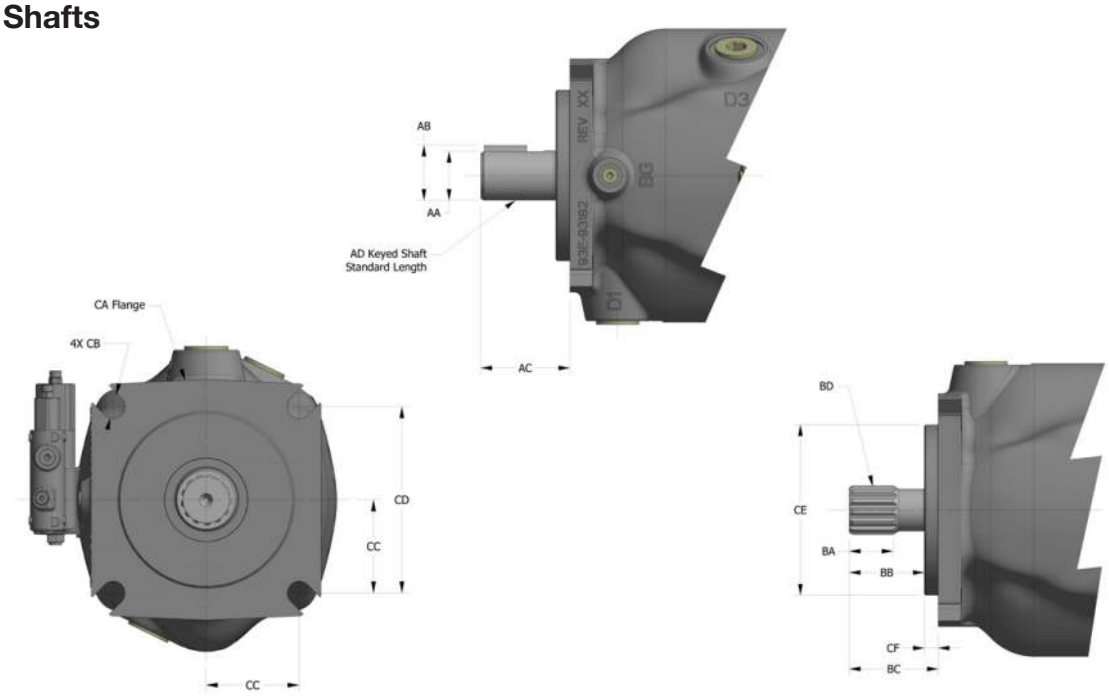

P1/PD-140 Mounting Flange & Shaft Dimensions		
Dimension	**ISO (Code 04)**	**SAE (Code 01 or 02)**
ØAA	50.03/50.00	44.45/44.43
AB	53.40/53.21	49.35/49.18
AC	92.0	75.0
AD	ISO 3019-2: E50N	SAE J744 44-1 (D)
BA	N/A	39.0
BB	N/A	67.0
BC	N/A	75.0
BD	N/A	SPLINE: SAE J498-B 1969 SAE 44-4(D) INVOLUTE SPLINE CLASS 1 FLAT ROOT SIDE FIT NUMBER OF TEETH - 13 PITCH - 8/16 PRESSURE ANGLE - 30° MAJOR DIAMETER - 43.71/43.59 PITCH DIAMETER - 41.275
CA	ISO 3019-2: 180B4SW	SAE J744: JUN 96 152-4 (D)
CB	18.2/17.8	20.9/20.5
CC	79.2	80.8
CD	158.4	161.6
CE	180.00/179.95	152.40/152.35
CF	9.5/9.0	12.7/12.2
Keyway Width	14.00/13.95	11.14/11.09

Pump Installation - P1/PD-140
End Ports
“L” or “AM” Control Option

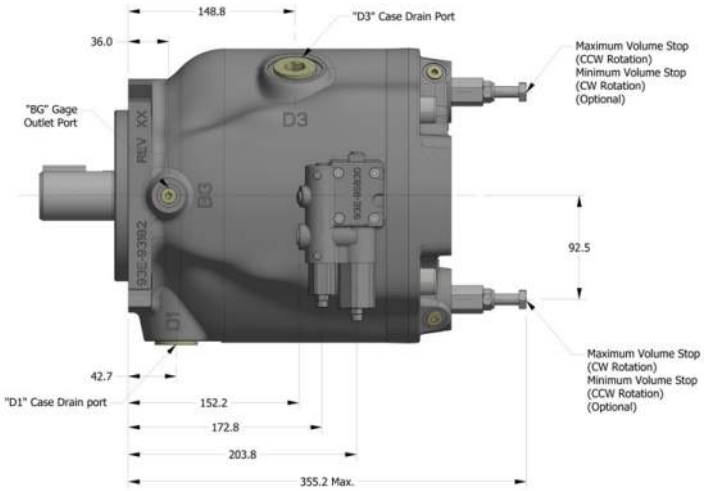

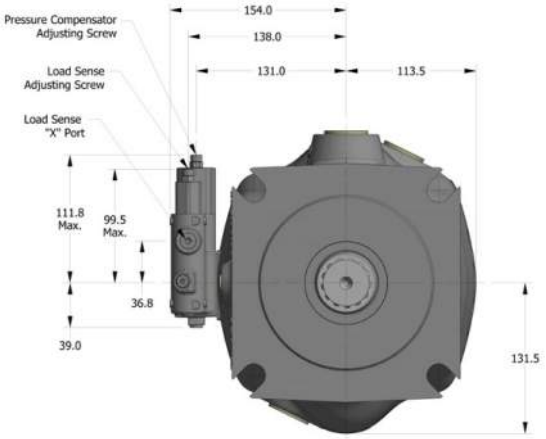

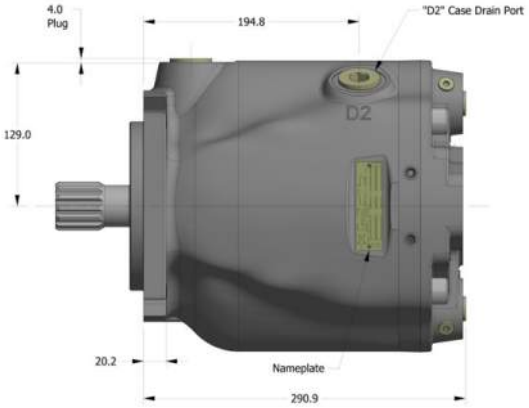

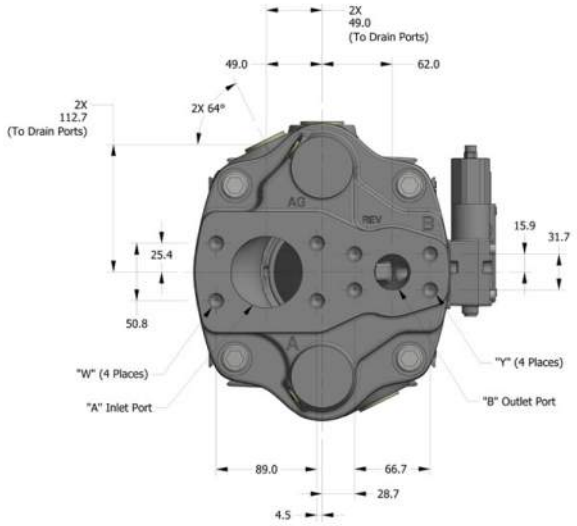

P1/PD-140 Port Sizes			
Ports	**SAE Flanged**	**Metric Flanged**	**BSPP**
"A" Inlet	2-1/2" Code 61	DN63	-
W Threads	1/2-13 UNC-2B	M12x1.75-6H	-
"B" Outlet	1-1/4" Code 62	DN32	-
Y Threads	1/2-13 UNC-28	M12x1.75-6H	-
BG, X	SAE-4	M12x1.5	1/4"
D1, D2, D3	SAE-16	M33x2	1"

Note A: SAE flanged ports conform to SAE J518
Note B: SAE o-ring port conforms to SAE 1926
Note C: Metric flanged ports conform to ISO 6162
Note D: Metric o-ring boss port conforms to ISO 6149-1
Note E: BSPP port conforms to ISO 228-1

Pump Installation - P1/PD-140
Side Ports
“L” or “AM” Control Option

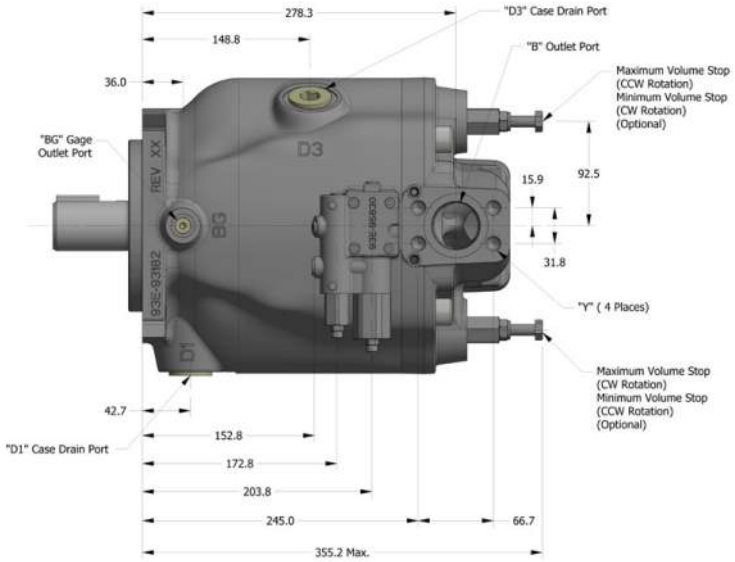

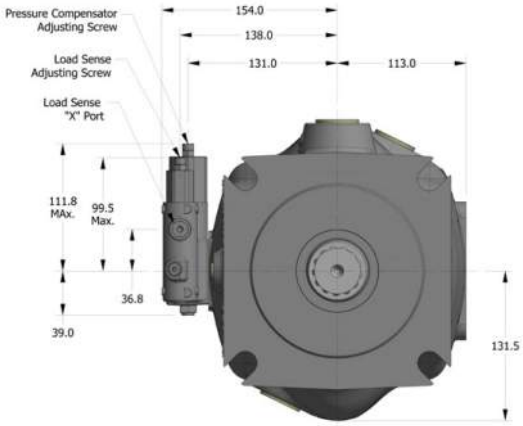

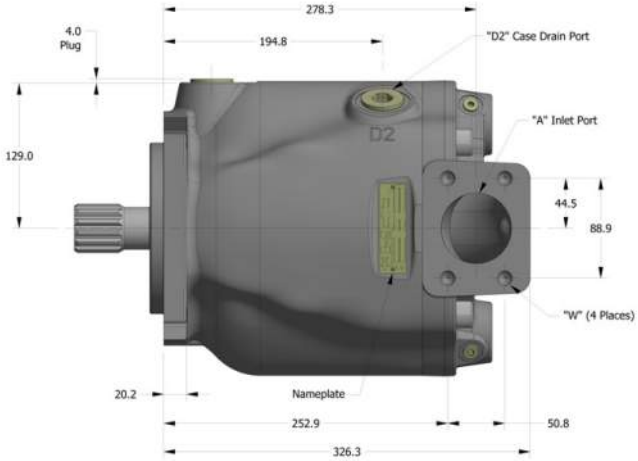

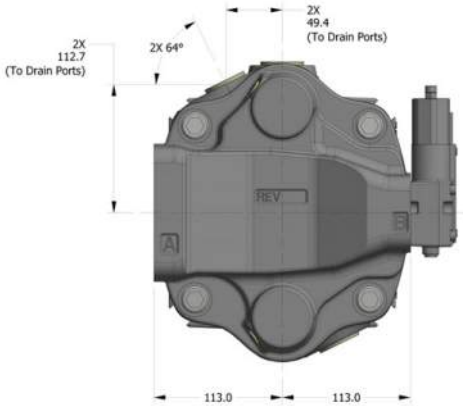

P1/PD-140 Port Sizes			
Ports	**SAE Flanged**	**Metric Flanged**	**BSPP**
"A" Inlet	2-1/2" Code 61	DN63	-
W Threads	1/2-13 UNC-2B	M12x1.75-6H	-
"B" Outlet	1-1/4" Code 62	DN32	-
Y Threads	1/2-13 UNC-28	M12x1.75-6H	-
BG, X	SAE-4	M12x1.5	1/4"
D1, D2, D3	SAE-16	M33x2	1"

Note A: SAE flanged ports conform to SAE J518
Note B: SAE o-ring port conforms to SAE 1926
Note C: Metric flanged ports conform to ISO 6162
Note D: Metric o-ring boss port conforms to ISO 6149-1
Note E: BSPP port conforms to ISO 228-1

Pump Installation - P1/PD-140 Side Ports with Thru-Drive "L" or "AM" Control Option

P1/PD-140 Port Sizes			
Ports	**SAE Flanged**	**Metric Flanged**	**BSPP**
"A" Inlet	2-1/2" Code 61	DN63	-
W Threads	1/2-13 UNC-2B	M12x1.75-6H	-
"B" Outlet	1-1/4" Code 62	DN32	-
Y Threads	1/2-13 UNC-28	M12x1.75-6H	-
BG, X	SAE-4	M12x1.5	1/4"
D1, D2, D3	SAE-16	M33x2	1"

Note A: SAE flanged ports conform to SAE J518
Note B: SAE o-ring port conforms to SAE 1926
Note C: Metric flanged ports conform to ISO 6162
Note D: Metric o-ring boss port conforms to ISO 6149-1
Note E: BSPP port conforms to ISO 228-1

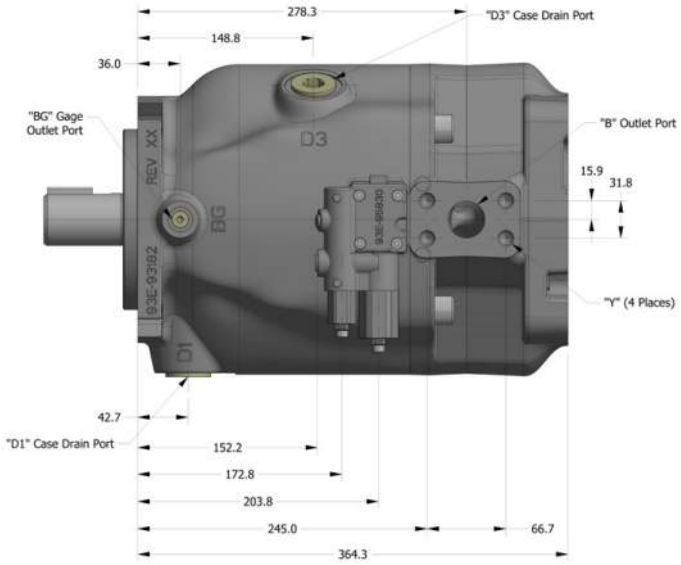

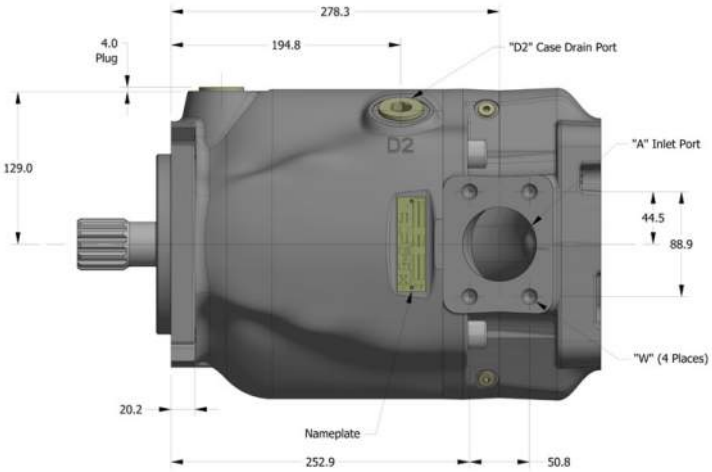

Pump Installation - P1/PD-140 Side Ports with Thru-Drive Mounting Options

SAE-A Mounting Options Information	
Model Number T0*A Spline: ANSI B92.1 1996 SAE 16-4 (A) Involute Spline Class 5 Flat Root Side Fit Number of Teeth - 9 Pitch - 16/32 Pressure Angle - 30° Major Diameter - 13.06/12.93 mm Pitch Diameter - 14.29 mm	Model Number T0*H Spline: ANSI B92.1 1996 SAE 19-4 Involute Spline Class 5 Flat Root Side Fit Number of Teeth - 11 Pitch - 16/32 Pressure Angle - 30° Minor Diameter - 16.14/16.02 mm Pitch Diameter - 17.46 mm

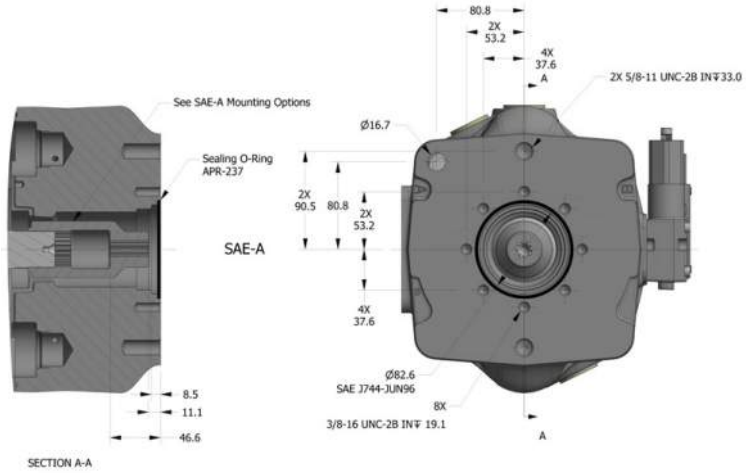

SAE-B Mounting Options Information	
Model Number T0*B Spline: ANSI B92.1 1996 SAE 22-4 (B) Involute Spline Class 5 Flat Root Side Fit Number of Teeth - 13 Pitch - 16/32 Pressure Angle - 30° Minor Diameter - 19.28/19.15 mm Pitch Diameter - 20.64 mm	Model Number T0*Q Spline: ANSI B92.1 1996 SAE 25-4 (B-B) Involute Spline Class 5 Flat Root Side Fit Number of Teeth - 15 Pitch - 16/32 Pressure Angle - 30°h Minor Diameter - 22.40/22.28 mm Pitch Diameter - 23.81 mm

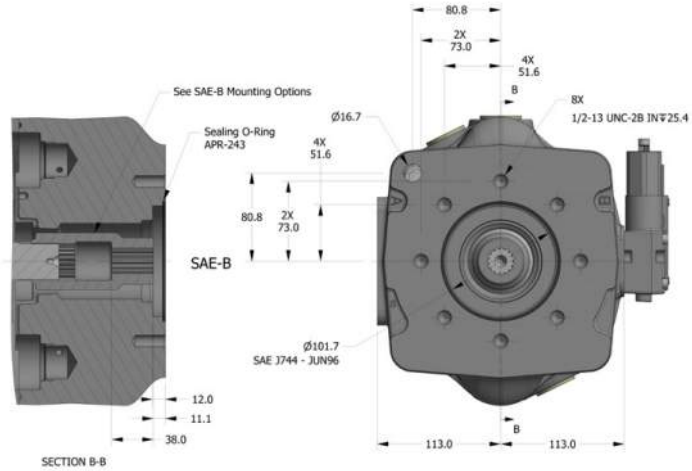

SAE-C Mounting Options Information	
Model Number T0*C Spline: ANSI B92.1 1996 SAE 32-4 (C) Involute Spline Class 5 Flat Root Side Fit Number of Teeth - 14 Pitch - 12/24 Pressure Angle - 30° Minor Diameter - 27.74/27.61 mm Pitch Diameter - 29.63 mm	Model Number T0*N Spline: ANSI B92.1 1996 SAE 38-4 (C-C) Involute Spline Class 5 Flat Root Side Fit Number of Teeth - 17 Pitch - 12/24 Pressure Angle - 30° Minor Diameter - 34.01/33.88 mm Pitch Diameter - 35.98 mm

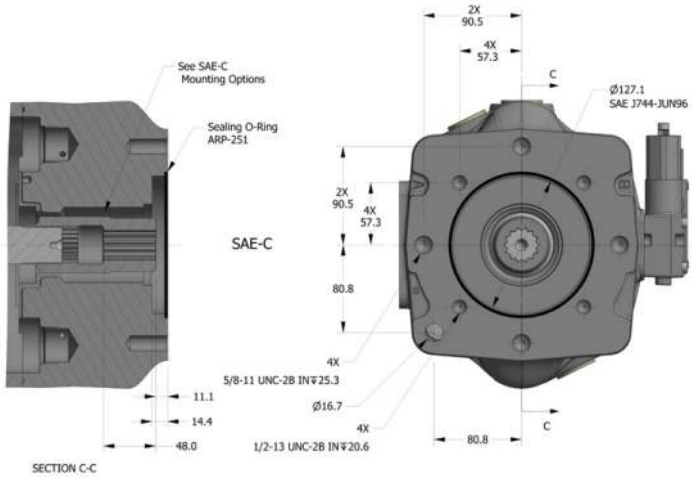

SAE-D Mounting Options Information
Model Number T0*D Spline: ANSI B92.1 1996 SAE 44-4 (D) Involute Spline Class 1 Flat Root Side Fit Number of Teeth - 13 Pitch - 8/16 Pressure Angle - 30° Minor Diameter - 38.38/38.25 mm Pitch Diameter - 41.28 mm

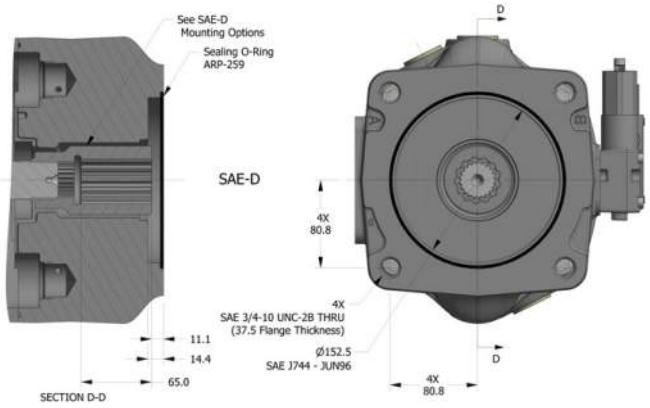

C0 Control

For C0 control dimensions see frame size dimensional section because the C0 control uses the same control housing as L & AM controls.

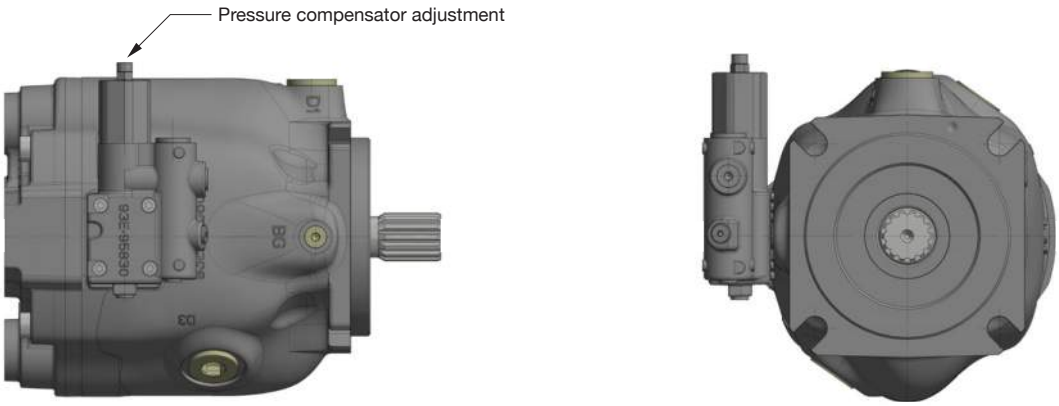

P*075 shown

L0T & AMT Control

L0T & AMT (45 & 60cc)
The L0T & AMT controls on the 45 & 60cc use the same adapter block that is used on the AN & ANT controls.

L0T & AMT (75-140cc)

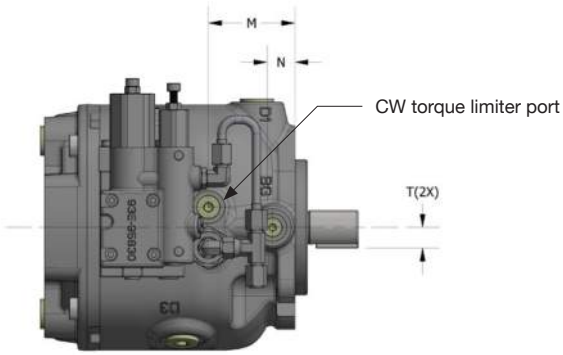

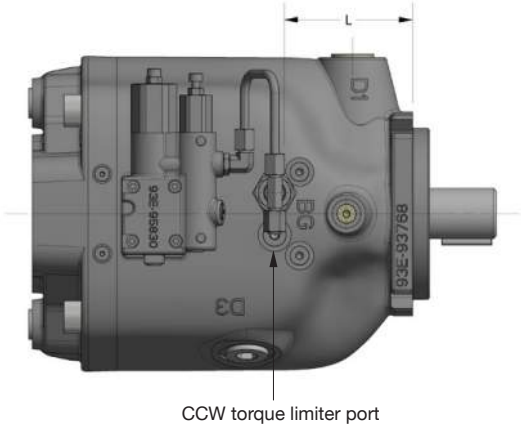

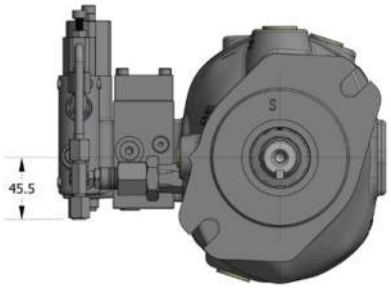

P*045 CCW shown

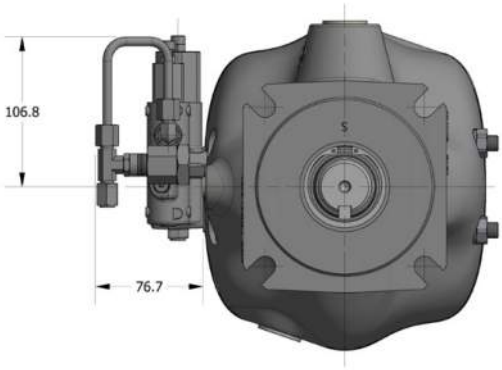

P*100 CW shown

L0T & AMT Control Dimensions (mm)				
Model	**L**	**M**	**N**	**T**
P*045	**	65	21	15
P*060	**	70	25	20
P*075/085	64	72	**	15
P*100	95	103	**	16
P*140	117	128	**	16

AN & ANT Control

The AN & ANT controls use the AM compensator with the addition of an adapter block and tubing.

AN Control (All sizes)

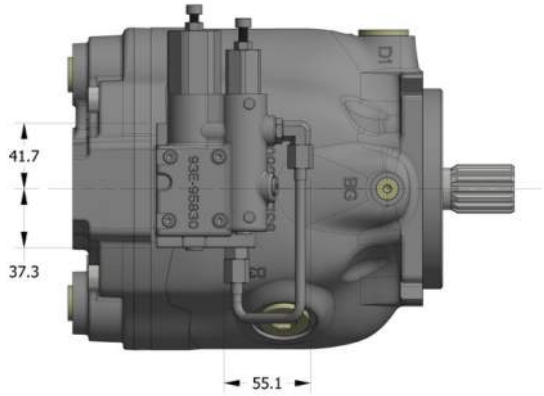

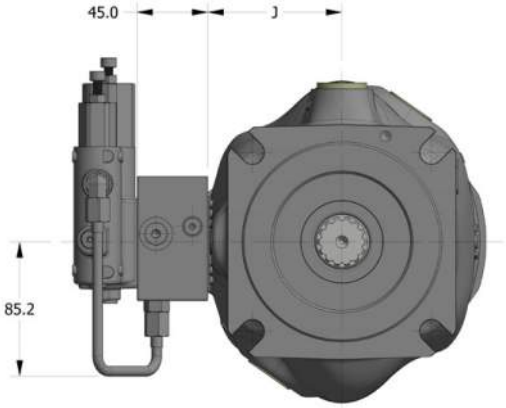

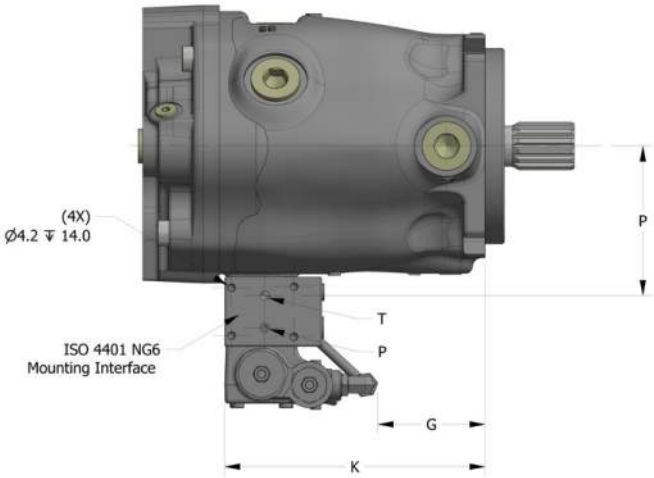

P*075 shown

ANT Control (45-140cc only)

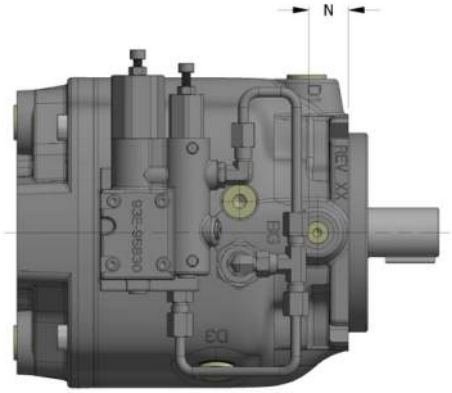

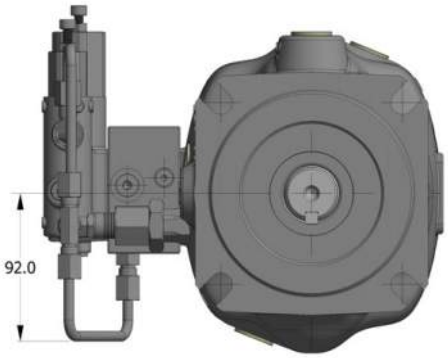

P*060 shown

AN & ANT Control Dimensions (mm)					
Model	**G**	**J**	**K**	**N**	**P**
P*018	18	65	117	**	77
P*028	37	71	135	**	83
P*045	47	78	146	21	90
P*060	60	82	159	25	94
P*075/085	70	85	169	28	97
P*100	117	101	216	58	113
P*140	129	113	228	51	125

AE/AF Control

The AE/AF control uses the AM compensator with same adapter block that used on the AN & ANT controls

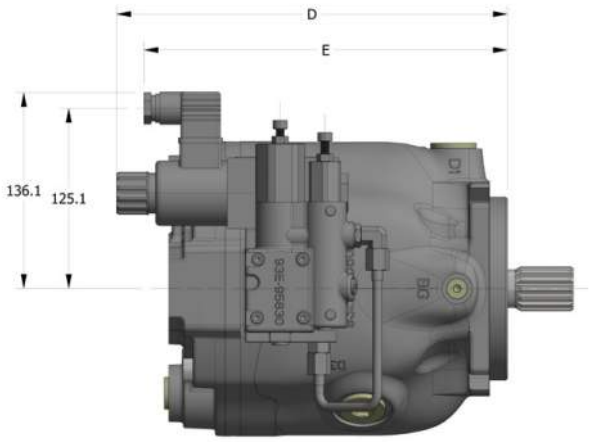

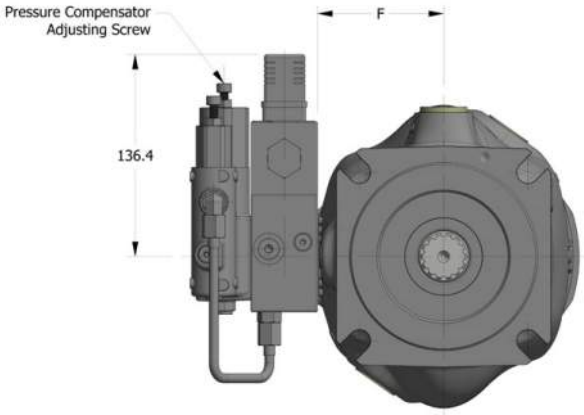

C0*, L0* Unload Control

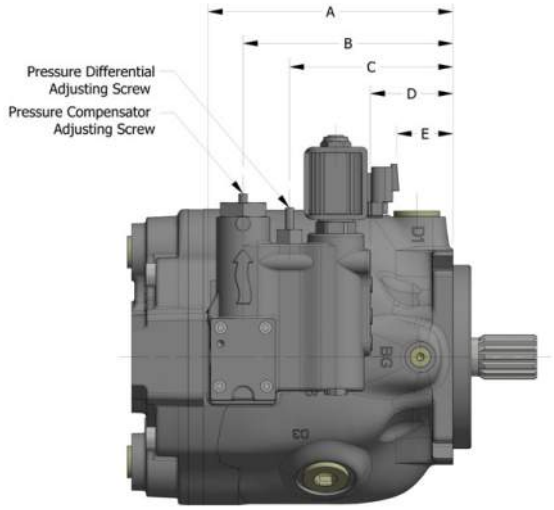

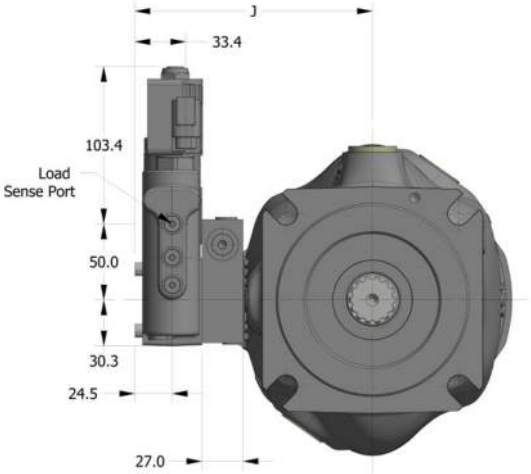

P*075 shown

AE/AF Control Dimensions by Frame Size (mm)			
Model	**D**	**E**	**F**
P*018	207	188	65
P*028	225	206	71
P*045	236	217	78
P*060	248	229	82
P*075/085	271	252	85
P*100	305	286	101
P*140	317	298	113

Unload (*03 & *06) Control Dimensions by Frame Size (mm)						
Model	**A**	**B**	**C**	**D**	**E**	**J**
P*028	134	109	77	25	12	142
P*045	145	120	88	35	15	149
P*060	157	132	100	48	27	153
P*075/085	167	142	110	71	50	156
P*100	214	189	157	105	86	172
P*140	226	201	169	117	94	184

AG/AH Control

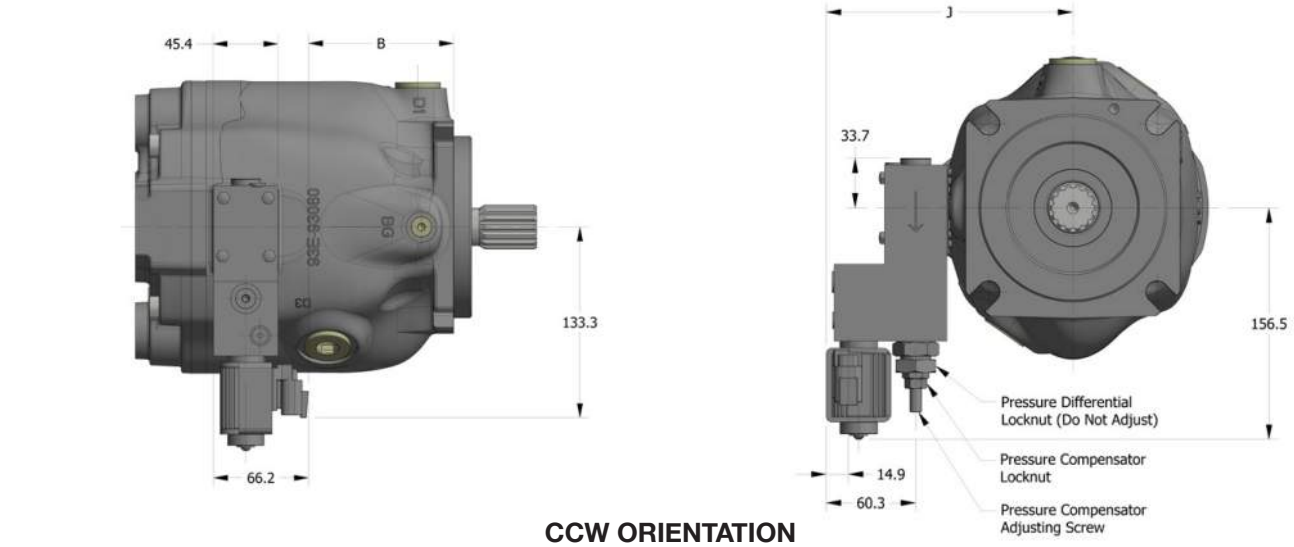

CCW ORIENTATION
P*075 shown

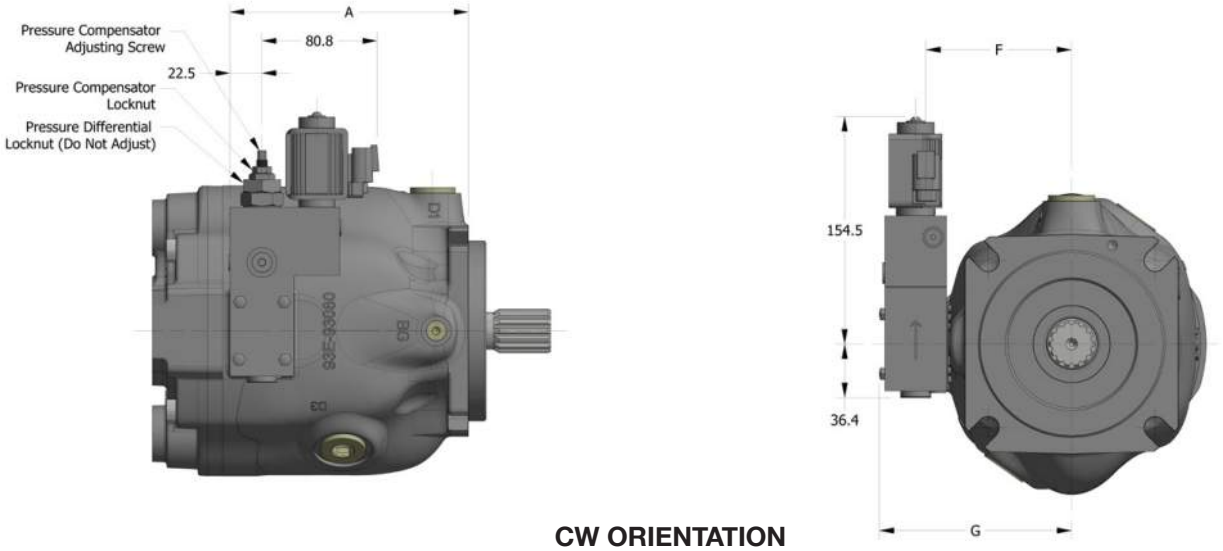

CW ORIENTATION
P*075 shown

AG/AH Control Dimensions by Frame Size (mm)					
Model	**A**	**B**	**F**	**G**	**J**
P*018	116	71	79	111	142
P*028	134	89	85	116	148
P*045	145	100	92	124	155
P*060	157	112	96	128	160
P*075/085	168	123	99	131	162
P*100	214	169	115	147	179
P*140	226	181	127	159	190

P, T, S, U Electronic Control Options

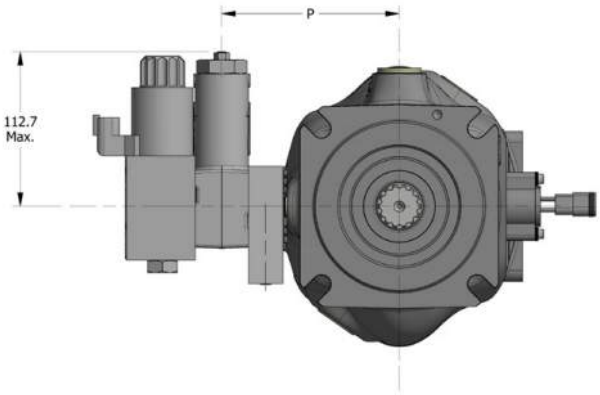

CW ORIENTATION
P*075 shown

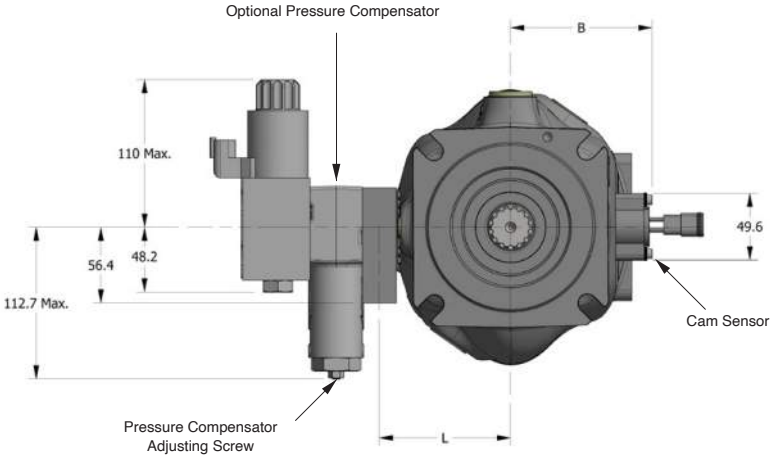

CCW ORIENTATION
P*075 shown

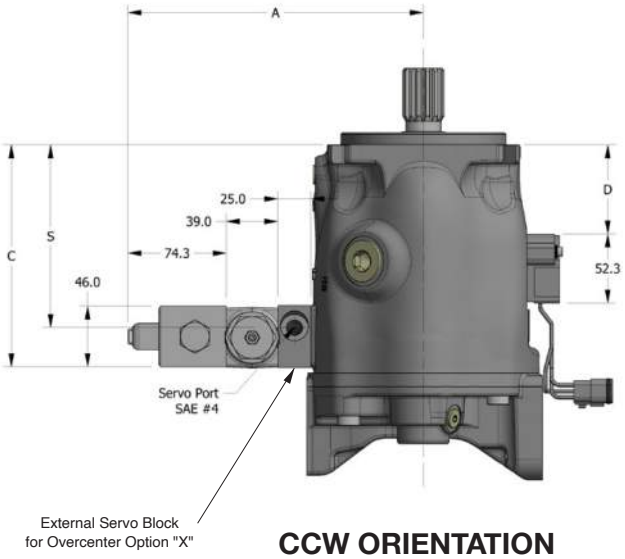

CCW ORIENTATION
P*075 shown

RDEC Control Dimensions by Frame Size (mm)							
Model	**A**	**B**	**C**	**D**	**L**	**P**	**S**
P*018	203	85	116	49	**	85	**
P*028	209	89	135	56	**	91	**
P*045	216	96	145	60	91	123	116
P*060	220	105	158	64	95	127	133
P*075/085	223	108	168	68	98	130	138
P*100	239	121	215	101	114	146	185
P*140	251	130	227	96	126	158	196

Mounting

These pumps are designed to operate with the shaft horizontal or pointing downward. For shaft up mounting consult factory. The pump shaft must be in alignment with the shaft of the source driver and should be checked with a dial indicator. The mating pilot bore and coupling must be concentric. This concentricity is particularly important if the shaft is rigidly connected to the driven load without a flexible coupling.

Shaft Information

Splined: The shafts will accept a maximum misalignment of 0.15mm, 0.005 inch, total indicator reading. Angular misalignment at the external and internal spline axis must be less than ± 0,002 mm per mm of shaft radius, ± 0.002 inches per inch of shaft radius. The coupling interface must be lubricated. PARKER recommends lithium molydisulfide or similar grease. The internal coupling should be hardened to Rc 27-34 and must conform to SAE-J498c, class 5 flat root side fit.
Keyed: High strength heat treated keys must be used. Replacement keys must be hardened to 27-34 Rc. The key corners must be chamfered 0.81-1.0 mm, 0.032”-0.040”, at 45° to clear radii that exist in the keyway.

Side Load Capacity

The P1/PD series is designed for inline-drive. Side loading on the shaft is not recommended. If this is unavoidable consult your nearest PARKER representative.

Fluid Connections

Connect inlet and outlet lines to the port block of the pump. The maximum case pressure is 2 bar (30 psi) continuous, 4 bar (60 psi) intermittent. The case pressure must never exceed inlet pressure by more than .5 bar (7 psi). When connecting case drain line make certain that drain plumbing passes above highest point of the pump before passing to the reservoir. The case leakage line must be of sufficient size to prevent back pressure in excess of 2 bar(30 psi) and returned to the reservoir below the surface of the oil as far from the supply inlet as possible. All fluid lines, whether pipe, tubing, or hose must be adequate size and strength to assure free flow through the pump. An undersize inlet line will prevent the pump from operating properly at full rated speed. An undersize outlet line will cause back pressure and cause heat generation and increased noise. Flexible hose lines are recommended. If rigid piping is used, the workmanship must be accurate to eliminate strain on the pump port block or to the fluid connections. Sharp bends in the lines must be eliminated wherever possible. All system piping must be cleaned and flushed before installing pump. Make sure the entire hydraulic system is free of dirt, lint, scale, or other foreign material.
CAUTION: Do not use galvanized pipe. Galvanized coating can flake off with continued use.

System Relief Valves

Although the P1/PD series pumps have very fast off-stroke compensator response, system relief valves are recommended in all cases for safety considerations.

Recommended Fluids

The fluid recommended for use in these pumps has a petroleum base and contains agents which provide oxidation inhibition and anti-rust, anti-foam and de-aerating properties as described in PARKER standard HF-1. Where anti-wear additive fluids are specified, see PARKER standard HF-0.

Viscosity Index

90 V. I. minimum. Higher values extend the range of operating temperature but may reduce the service life of the fluid.

Temperature

Determined by the viscosity characteristics of the fluid used. Because high temperatures degrade seals, reduce the service life of the fluid and create hazards, fluid temperature should not exceed 110°C (230°F) at the case drain.

Maintenance

The pump is self-lubricating and preventative maintenance is limited to keeping system fluid clean by changing filters frequently. Keep all fittings and screws tight. Do not operate at pressures and speeds in excess of the recommended limit. If the pump does not operate properly, check the troubleshooting chart before attempting to overhaul the unit. Overhauling may be accomplished by referring to the disassembly, rework limits of wear parts, and assembly procedures as provided in this service manual.

Fluid Cleanliness

Fluid must be cleaned before and continuously during operation, by filters that maintain a cleanliness level of ISO 20/18/14. Better cleanliness levels will significantly extend the life of the components. As contaminant generation may vary with each application, each must be analyzed to determine proper filtration to maintain the required cleanliness level.

CONVERSION FACTORS

DEFINITION & UNIT		
Displacement	in^3/rev x 16.387 = cm^3/rev	cm^3/rev x 0.06102 = in^3/rev
Flow	gpm x 3.78 = L/min	L/min x 0.2642 = gpm
Power	hp x 0.7457 = kW	kW x 1.341 = hp
Torque	lb-ft x 1.3567 = Nm	Nm x 0.7376 = lb-ft
Pressure	lbs/in^2 (psi) x 0.06895 = bar lbs/in^2 (psi) x 6.895 = kPa	bar x 14.50 = lbs/in^2 (psi) kPa x 0.1450 = lbs/in^2 (psi)
Weight	lb x 0.4536 = kg	kg x 2.205 = lbs
Force	lb x 4.448 = N	N x 0.2248 = lbs
Volume	in^3 x 16.387 = cm^3	cm^3 x 0.06102 = in^3
Area	in^2 x 6.452 = cm^2	cm^2 x 0.1550 = in^2
Length	in x 25.4 = mm	mm x 0.03937 = in
Temperature	$\frac{\text{degree F-32}}{1.8}$ = °C	1.8 x C+32 = °F
Viscosity	cSt x 1.0 = mm^2/sec SSU = cSt x 4.25 + 14	mm^2/sec x 1.0 = cSt 20 cSt = 99 SSU

FLUID POWER FORMULAS

Pump output flow	U.S. gpm	$\frac{\text{rpm x displacement (in}^3\text{/rev) x volumetric eff.}}{231}$
Pump input torque	ft lbs	$\frac{\text{pressure (psi) x displacement (in}^3\text{/rev)}}{24\pi \text{ x mech. eff.}}$
Pump input power	hp	$\frac{\text{rpm x torque (ft-lbs) x } 2\pi}{33000} = \frac{\text{flow (GPM) x pressure (psi)}}{1714 \text{ x overall eff.}}$
Fluid motor speed	rpm	$\frac{\text{231 x flow rate(U.S. gpm) x volumetric eff.}}{\text{displacement (in}^3\text{/rev)}}$
Fluid motor torque	ft lbs	$\frac{\text{pressure (psi) x displacement (in}^3\text{/rev) x mech. eff.}}{24\pi}$
Fluid motor power	hp	$\frac{\text{rpm x torque (ft-lbs) x } 2\pi}{33000} = \frac{\text{flow (GPM) x pressure (psi) x overall eff.}}{1714}$
(Metric)		
Pump output flow	Lpm	$\frac{\text{rpm x displacement (cm}^3\text{/rev) x volumetric eff.}}{1000}$
Pump input torque	Nm	$\frac{\text{pressure(bar) x displacement (cm}^3\text{/rev)}}{20\pi \text{ x mech. eff.}}$
Pump input power	kW	$\frac{\text{rpm x torque (Nm) x } 2\pi}{60000} = \frac{\text{flow (Lpm) x pressure (bar)}}{600 \text{ x overall eff.}}$
Fluid motor speed	rpm	$\frac{\text{1000 x flow rate (Lpm) x volumetric eff.}}{\text{displacement (cm}^3\text{/rev)}}$
Fluid motor torque	Nm	$\frac{\text{pressure(bar) x displacement (cm}^3\text{/rev) x mech. eff.}}{20\pi}$
Fluid motor power	kW	$\frac{\text{rpm x torque (Nm) x } 2\pi}{60000} = \frac{\text{flow (Lpm) x pressure (bar) x overall eff.}}{600}$

Extensive Hydraulic Product Offering

Accumulators

Piston, bladder and diaphragm type accumulators, gas bottles and KleenVent reservoir isolators.

www.parker.com/accumulator

Compact Hydraulics

Self-contained with a motor, gear pump, reservoir, internal valving, load hold checks and relief valves.

www.parker.com/oildyne

Cylinders

Standard and custom hydraulic cylinders for industrial and mobile applications.

www.parker.com/cylinder

Electronics/Remote Controls

Parker's unique IQAN approach combines sturdy, well-tested hardware with intelligent, flexible computing power.

www.parker.com/iqan

Filtration

Pressure and return line filters enhances machine life, reduces maintenance and lowers costs.

www.parker.com/hydraulicfilter

Integrated Hydraulic Circuits

Solutions for complex circuits that include threaded cartridge valves integrated into a single manifold.

www.parker.com/hcs

Motors

Full line of high and low speed motors provides power up to 15,000 in-lbs of torque.

www.parker.com/hps

Power Take Off

Parker Chelsea leads the industry for engineering, innovation and performance in auxiliary power systems.

www.parker.com/chelsea

Power Units

The most complete line of standard, pre-engineered, cataloged hydraulic power units in the industry.

www.parker.com/hps

Pumps

Broad line of energy-efficient hydraulic pumps that includes piston, vane and gear pumps.

www.parker.com/hps

Rotary Actuator

Industry leader in the design and manufacture of hydraulic rack and pinion, and vane style rotary actuators.

www.parker.com/cylinder

Valves and Controls

Hydraulic valves for virtually every hydraulic equipment application, from simple to precise control.

www.parker.com/hydraulicvalve

The items described in this document and other documents and descriptions provided by Parker Hannifin Corporation, Hydraulics Group, and its authorized distributors ("Seller") are hereby offered for sale at prices to be established by Seller. This offer and its acceptance by any customer ("Buyer") shall be governed by all of the following Terms and Conditions. Buyer's order for any item described in its document, when communicated to Seller verbally, or in writing, shall constitute acceptance of this offer. All goods or work described will be referred to as "Products".

1. Terms and Conditions. Seller's willingness to offer Products, or accept an order for Products, to or from Buyer is expressly conditioned on Buyer's assent to these Terms and Conditions and to the terms and conditions found on-line at www.parker.com/saleterms/. Seller objects to any contrary or additional term or condition of Buyer's order or any other document issued by Buyer.

2. Price Adjustments; Payments. Prices stated on the reverse side or preceding pages of this document are valid for 30 days. After 30 days, Seller may change prices to reflect any increase in its costs resulting from state, federal or local legislation, price increases from its suppliers, or any change in the rate, charge, or classification of any carrier. The prices stated on the reverse or preceding pages of this document do not include any sales, use, or other taxes unless so stated specifically. Unless otherwise specified by Seller, all prices are F.O.B. Seller's facility, and payment is due 30 days from the date of invoice. After 30 days, Buyer shall pay interest on any unpaid invoices at the rate of 1.5% per month or the maximum allowable rate under applicable law.

3. Delivery Dates; Title and Risk; Shipment. All delivery dates are approximate and Seller shall not be responsible for any damages resulting from any delay. Regardless of the manner of shipment, title to any products and risk of loss or damage shall pass to Buyer upon tender to the carrier at Seller's facility (i.e., when it's on the truck, it's yours). Unless otherwise stated, Seller may exercise its judgment in choosing the carrier and means of delivery. No deferment of shipment at Buyers' request beyond the respective dates indicated will be made except on terms that will indemnify, defend and hold Seller harmless against all loss and additional expense. Buyer shall be responsible for any additional shipping charges incurred by Seller due to Buyer's changes in shipping, product specifications or in accordance with Section 13, herein.

4. Warranty. Seller warrants that the Products sold hereunder shall be free from defects in material or workmanship for a period of eighteen months from the date of delivery to Buyer. The prices charged for Seller's products are based upon the exclusive limited warranty stated above, and upon the following disclaimer: DISCLAIMER OF WARRANTY: THIS WARRANTY COMPRISES THE SOLE AND ENTIRE WARRANTY PERTAINING TO PRODUCTS PROVIDED HEREUNDER. SELLER DISCLAIMS ALL OTHER WARRANTIES, EXPRESS AND IMPLIED, INCLUDING MERCHANTABILITY AND FITNESS FOR A PARTICULAR PURPOSE.

5. Claims; Commencement of Actions. Buyer shall promptly inspect all Products upon delivery. No claims for shortages will be allowed unless reported to the Seller within 10 days of delivery. No other claims against Seller will be allowed unless asserted in writing within 60 days after delivery or, in the case of an alleged breach of warranty, within 30 days after the date within the warranty period on which the defect is or should have been discovered by Buyer. Any action based upon breach of this agreement or upon any other claim arising out of this sale (other than an action by Seller for any amount due to Seller from Buyer) must be commenced within thirteen months from the date of tender of delivery by Seller or, for a cause of action based upon an alleged breach of warranty, within thirteen months from the date within the warranty period on which the defect is or should have been discovered by Buyer.

6. LIMITATION OF LIABILITY. UPON NOTIFICATION, SELLER WILL, AT ITS OPTION, REPAIR OR REPLACE A DEFECTIVE PRODUCT, OR REFUND THE PURCHASE PRICE. IN NO EVENT SHALL SELLER BE LIABLE TO BUYER FOR ANY SPECIAL, INDIRECT, INCIDENTAL OR CONSEQUENTIAL DAMAGES ARISING OUT OF, OR AS THE RESULT OF, THE SALE, DELIVERY, NON-DELIVERY, SERVICING, USE OR LOSS OF USE OF THE PRODUCTS OR ANY PART THEREOF, OR FOR ANY CHARGES OR EXPENSES OF ANY NATURE INCURRED WITHOUT SELLER'S WRITTEN CONSENT, EVEN IF SELLER HAS BEEN NEGLIGENT, WHETHER IN CONTRACT, TORT OR OTHER LEGAL THEORY. IN NO EVENT SHALL SELLER'S LIABILITY UNDER ANY CLAIM MADE BY BUYER EXCEED THE PURCHASE PRICE OF THE PRODUCTS.

7. Contingencies. Seller shall not be liable for any default or delay in performance if caused by circumstances beyond the reasonable control of Seller.

8. User Responsibility. The user, through its own analysis and testing, is solely responsible for making the final selection of the system and Product and assuring that all performance, endurance, maintenance, safety and warning requirements of the application are met. The user must analyze all aspects of the application and follow applicable industry standards and Product information. If Seller provides Product or system options, the user is responsible for determining that such data and specifications are suitable and sufficient for all applications and reasonably foreseeable uses of the Products or systems.

9. Loss to Buyer's Property. Any designs, tools, patterns, materials, drawings, confidential information or equipment furnished by Buyer or any other items which become Buyer's property, may be considered obsolete and may be destroyed by Seller after two consecutive years have elapsed without Buyer placing an order for the items which are manufactured using such property. Seller shall not be responsible for any loss or damage to such property while it is in Seller's possession or control.

10. Special Tooling. A tooling charge may be imposed for any special tooling, including without limitation, dies, fixtures, molds and patterns, acquired to manufacture Products. Such special tooling shall be and remain Seller's property notwithstanding payment of any charges by Buyer. In no event will Buyer acquire any interest in apparatus belonging to Seller which is utilized in the manufacture of the Products, even if such apparatus has been specially converted or adapted for such manufacture and notwithstanding any charges paid by Buyer. Unless otherwise agreed, Seller shall have the right to alter, discard or otherwise dispose of any special tooling or other property in its sole discretion at any time.

11. Buyer's Obligation; Rights of Seller. To secure payment of all sums due or otherwise, Seller shall retain a security interest in the goods delivered and this agreement shall be deemed a Security Agreement under the Uniform Commercial Code. Buyer authorizes Seller as its attorney to execute and file on Buyer's behalf all documents Seller deems necessary to perfect its security interest. Seller shall have a security interest in, and lien upon, any property of Buyer in Seller's possession as security for the payment of any amounts owed to Seller by Buyer.

12. Improper Use and Indemnity. Buyer shall indemnify, defend, and hold Seller harmless from any claim, liability, damages, lawsuits, and costs (including attorney fees), whether for personal injury, property damage, patent, trademark or copyright infringement or any other claim, brought by or incurred by Buyer, Buyer's employees, or any other person, arising out of: (a) improper selection, improper application or other misuse of Products purchased by Buyer from Seller; (b) any act or omission, negligent or otherwise, of Buyer; (c) Seller's use of patterns, plans, drawings, or specifications furnished by Buyer to manufacture Product; or (d) Buyer's failure to comply with these terms and conditions. Seller shall not indemnify Buyer under any circumstance except as otherwise provided.

13. Cancellations and Changes. Orders shall not be subject to cancellation or change by Buyer for any reason, except with Seller's written consent and upon terms that will indemnify, defend and hold Seller harmless against all direct, incidental and consequential loss or damage. Seller may change product features, specifications, designs and availability with notice to Buyer.

14. Limitation on Assignment. Buyer may not assign its rights or obligations under this agreement without the prior written consent of Seller.

15. Entire Agreement. This agreement contains the entire agreement between the Buyer and Seller and constitutes the final, complete and exclusive expression of the terms of the agreement. All prior or contemporaneous written or oral agreements or negotiations with respect to the subject matter are herein merged.

16. Waiver and Severability. Failure to enforce any provision of this agreement will not waive that provision nor will any such failure prejudice Seller's right to enforce that provision in the future. Invalidation of any provision of this agreement by legislation or other rule of law shall not invalidate any other provision herein. The remaining provisions of this agreement will remain in full force and effect.

17. Termination. This agreement may be terminated by Seller for any reason and at any time by giving Buyer thirty (30) days written notice of termination. In addition, Seller may by written notice immediately terminate this agreement for the following: (a) Buyer commits a breach of any provision of this agreement (b) the appointment of a trustee, receiver or custodian for all or any part of Buyer's property (c) the filing of a petition for relief in bankruptcy of the other Party on its own behalf, or by a third party (d) an assignment for the benefit of creditors, or (e) the dissolution or liquidation of the Buyer.

18. Governing Law. This agreement and the sale and delivery of all Products hereunder shall be deemed to have taken place in and shall be governed and construed in accordance with the laws of the State of Ohio, as applicable to contracts executed and wholly performed therein and without regard to conflicts of laws principles. Buyer irrevocably agrees and consents to the exclusive jurisdiction and venue of the courts of Cuyahoga County, Ohio with respect to any dispute, controversy or claim arising out of or relating to this agreement. Disputes between the parties shall not be settled by arbitration unless, after a dispute has arisen, both parties expressly agree in writing to arbitrate the dispute.

19. Indemnity for Infringement of Intellectual Property Rights. Seller shall have no liability for infringement of any patents, trademarks, copyrights, trade dress, trade secrets or similar rights except as provided in this Section. Seller will defend and indemnify Buyer against allegations of infringement of U.S. patents, U.S. trademarks, copyrights, trade dress and trade secrets ("Intellectual Property Rights"). Seller will defend at its expense and will pay the cost of any settlement or damages awarded in an action brought against Buyer based on an allegation that a Product sold pursuant to this Agreement infringes the Intellectual Property Rights of a third party. Seller's obligation to defend and indemnify Buyer is contingent on Buyer notifying Seller within ten (10) days after Buyer becomes aware of such allegations of infringement, and Seller having sole control over the defense of any allegations or actions including all negotiations for settlement or compromise. If a Product is subject to a claim that it infringes the Intellectual Property Rights of a third party, Seller may, at its sole expense and option, procure for Buyer the right to continue using the Product, replace or modify the Product so as to make it noninfringing, or offer to accept return of the Product and return the purchase price less a reasonable allowance for depreciation. Notwithstanding the foregoing, Seller shall have no liability for claims of infringement based on information provided by Buyer, or directed to Products delivered hereunder for which the designs are specified in whole or part by Buyer, or infringements resulting from the modification, combination or use in a system of any Product sold hereunder. The foregoing provisions of this Section shall constitute Seller's sole and exclusive liability and Buyer's sole and exclusive remedy for infringement of Intellectual Property Rights.

20. Taxes. Unless otherwise indicated, all prices and charges are exclusive of excise, sales, use, property, occupational or like taxes which may be imposed by any taxing authority upon the manufacture, sale or delivery of Products.

21. Equal Opportunity Clause. For the performance of government contracts and where dollar value of the Products exceed $10,000, the equal employment opportunity clauses in Executive Order 11246, VEVRAA, and 41 C.F.R. §§ 60-1.4(a), 60-741.5(a), and 60-250.4, are hereby incorporated.

August 2021	Removed ECU from catalog Removed design series change page Corrected minor miscellaneous errors
April 2021	Revised shaft torques Revised AMT & L0T Revised formulas page
September 2020	Changed remaining A-mod controls to B-mod Added conversion & formulas page Corrected minor miscellaneous errors
March 2020	Corrected AN, AE/AF, & 45 & 60 L0T/AMT control images Corrected minor miscellaneous errors
November 2019	Added B-mod information Consolidated model code pages Added P1/PD-085 Updated controls information to B-mod Added AG/AH controls Added unload controls Added valve specs on electrical controls Added housing & shaft options on 060 Remove 4-bolt SAE-B thru mount option Removed 24V "M" electronic control option Revised performance data section Updated dimensional section with B-mod dimensions Updated controls dimensional section
August 1, 2014	Add 1A valve to standard options Miscellaneous minor updates
January 30, 2014	P1045 - All drawings updated
April 1, 2013	Addition of P1/PD018 thru drive Miscellaneous drawings updates Shaft torque rating consolidation Electrical connector information

WARNING
The products described in this catalog can expose you to chemicals, including Lead, which is known to the State of California to cause cancer and birth defects or other reproductive harm. For more information go to www.p65warnings.ca.gov.

© 2021 Parker Hannifin Corporation, all rights reserved

Catalog HY28-2665-01/P1/EN
Effective: August 2021

Parker Hannifin Corporation
Hydraulic Pump and Power Systems Division
14249 Industrial Pkwy
Marysville, OH 43040 USA
phone 937 644 4435
fax 937 642 3639
www.parker.com