Pump safety block

Type DBA, DBAW, DBAE(E)

- Size 16, 25, 32
- Component series 2X
- Maximum operating pressure 350 bar
- Maximum flow 400 l/min

Features

- Depressurized start-up and circulation of the pump
- Intended for direct mounting onto the SAE pressure port of the pump
- Low circulation pressure due to short distance
- Low compression volume for soft switching to depressurized circulation
- Quick pressure build-up
- 4 adjustment types for pressure adjustment, optionally:
  - Rotary knob
  - Bushing with hexagon and protective cap
  - Lockable rotary knob with scale
  - Rotary knob with scale
- 5 pressure ratings, optional
- Low noise level due to direct flange mounting onto the pump

Contents

Features	1
Ordering code	2, 3
Model code	4
General circuit example set-up	5
Circuit examples	6 ... 8
Function, sections	9 ... 11
Technical data	12, 13
Characteristic curves	13 ... 14
Dimensions	15 ... 21
Admissible pumps	22, 23
Mating connectors	24
General notes, more information	24

www.belimportsnab.by

Ordering code

01	02	03	04	05	06	07	08		09	10	11	12	13	14	15	16	17	18	19	20
DBA							**2X**	**/**												*****

01	Pump safety block	**DBA**

02	**Without** directional valve	**no code**
	With mounted directional spool valve (data sheet 23178)	**W**
	With mounted proportional pressure relief valve for external control electronics, type DBET-6X/.Y... [1]	**E**
	With mounted proportional pressure relief valve with integrated control electronics, type DBETE-6X/.Y... [1]	**EE**

03	Size 16	**15**
	Size 25	**25**
	Size 32	**30**

04	**Without** directional valve	**no code**
	With mounted directional valve, normally closed	**A** [2]
	With mounted directional valve, normally open; generally type DBAE(E)	**B** [2]

Type of connection/SAE flange [3]

05	Standard flange (3000 ... 5000 psi)	**F**
	High-pressure flange (5000 psi)	**H**

Adjustment type for pressure adjustment [4]

06	Rotary knob (rotary knob with "KW" scale)	**1**
	Sleeve with hexagon and protective cap (spindle with protective cap "S"; adjustment at pressure switch "AS")	**2**
	Lockable rotary knob with scale (lockable rotary knob with "KS" scale)	**3** [5]
	Rotary knob with scale (rotary knob with "KW" scale)	**7**

07	**Without** pressure switch	**–**
	With mounted pressure switch type HED 8 OH... (connector according to DIN EN 175301-803, without mating con-nect	**D** [6]

08	Component series 20 ... 29 (20 ... 29: Unchanged installation and connection dimensions)	**2X**

Pressure rating [7]

09	Set pressure up to 50 bar	**50**
	Set pressure up to 100 bar	**100**
	Set pressure up to 200 bar	**200**
	Set pressure up to 315 bar	**315**
	Set pressure up to 350 bar	**350**

10	**Without** additional pressure relief valve	**no code**
	With mounted pressure relief valve type ZDB 6 VB...-4X/..	**Z** [7]
	With mounted pressure relief valve type Z2DB 6 VC...-4X/..SO2 1)	**ZZ** [7; 8]

11	Standard version	**no code**
	Valve for minimum cracking pressure (not type DBAE(E))	**U**

12	**Without** directional valve	**no code**
	With directional spool valve (only type DBAW)	**6E** [2]

13	DC voltage 24 V (in general with model "DBAE(E)...")	**G24** [2]
	DC voltage 205 V	**G205** [2]
	AC voltage 230 V 50/60 Hz	**W230** [2]

Ordering code

01	02	03	04	05	06	07	08		09	10	11	12	13	14	15	16	17	18	
DBA							**2X**	**/**											

14	**With** concealed manual override (standard)	**N9** [2; 9]
	With manual override	**N** [2; 9]
	Without manual override	**no code**

Electrical connection [1]

15	**Individual connection**	
	Without mating connector; connector DIN EN 175301-803	**K4** [6]
	Without mating connector; connector DIN EN 175201-804 (only model "DBAEE...")	**K31** [6]

Interface electronics

16	**Without** electronics (models "DBA..." and "DBAW")	**no code**
	Command value 0 ... 10 V (only model "DBAEE...")	**A1**
	Command value 4 ... 20 mA (only model "DBAEE...")	**F1**
	External control electronics (only model "DBAE...")	**H1**

Nozzle fitting

17	**Displacement pumps**	
	Lateral channel closed, transverse channel open, pilot oil bore open; (standard for displacement pumps; pure DB/DBW function)	**no code**
	Variable displacement pumps	
	Lateral channel closed, transverse channel open, pilot oil bore closed (e.g. for axial piston variable displacement pump type A4VSO140 with DRG controller)	**A00**
	Nozzle Ø0.8 mm in lateral channel, transverse channel open; pilot oil bore closed (standard for control pumps with DFR1 or DFLR controller)	**A08** [10]
	Nozzle Ø1.0 mm in lateral channel, transverse channel open; pilot oil bore closed (for nozzle fitting of the block, refer to the circuit examples on pages 6 to 8)	**A10** [10]

Seal material

18	NBR seals	**no code**
	FKM seals	**V**
	Attention: Observe compatibility of seals with hydraulic fluid used! (Other seals upon request)	

1) Externally discharge the pilot oil from the proportional pressure relief valve type DBET(E)
2) The ordering code is only required for models with mounted directional spool valve type DBAW or proportional pressure relief valve type DBAE(E).
3) Please observe pressure ratings and connection dimensions on page 20!
4) Adjustment type for pressure switch type HED 8 in brackets!
5) H-key is included in the scope of delivery.
6) Mating connectors, separate order, see page 24 and/or page 19 for model "DBAEE".
7) The same pressure rating at pressure limitation screw-in cartridge valves type DB 20 K, pressure relief valve (sandwich plate valve) type Z(2)DB 6 and pressure switches type HED 8.
8) Only if used for pressure limitation and control of variable displacement pumps type A10VSO.
9) **Notice!** Accidental activation of the manual override may lead to uncontrolled machine movements!
10) If used on variable displacement pumps with DFLR controllers, the nozzle at port X of the pump control must be removed!

Model code

01	02	03	04	05	06	07	08		09	10	11	12	13	14	15	16	17	18	19	20
DBA							**2X**	**/**												*****

		02						07	10		17.1			17.2	17.3
		Cover plate HSA 06 A 001 ...	4WE 6 H 6X..	4WE 6 HB 6X..	4WE 6 L37B.6X/..	DBET-6X/.Y.K4	DBETE-6X/.Y.K31	HED 8 OH 2X/...K14..	ZDB 6 VB.-4X/...SO2	Z2DB 6 VC.-4X/...SO2	Nozzle Ø0.8 in lateral channel	Nozzle Ø1.0 in lateral channel	Plug in lateral channel	Plug in pilot oil bore/cartridge	Plug in pilot oil bore
01	**DBA**	X													
02	**W**		X	X	X										
	E					X									X
	EE						X								X
04	**A** (normally closed)				X										
	B (normally open)		X[1]	X[2]		X[3]	X[4]								
07	**–** (without pressure switch)							–							
	D (with pressure switch)							X							
10	**–** (standard valve [5])								–	–					
	Z (max. 2 pressure limitations)								X						
	ZZ (max. 3 pressure limitations)									X					
17	**no code** [6]												X		
	A00												X	X	
	A08										X			X	
	A10											X		X	

[1] For model "DBAW" with pressure relief valve type Z(2)DB
[2] For model "DBAW" without pressure relief valve type Z(2)DB
[3] For model "DBAE" for external electronic controls/amplifier card
[4] For model "DBAEE" with internal electronic controls/amplifier card
[5] Only 1 pressure limitation
[6] Standard for displacement pumps

General circuit example set-ups can be found on page 5.

General circuit example set-up

Symbol

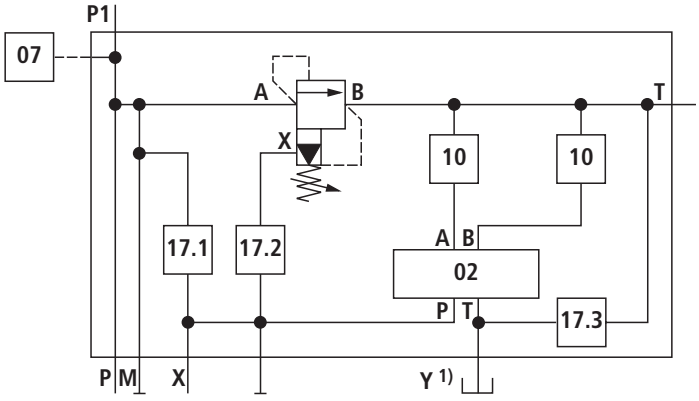

Disposition of nozzles/plugs item 17.1, 17.2 and 17.3

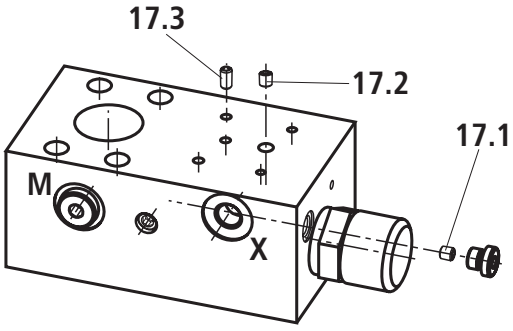

1) Only type DBAE(E)

Model codes can be found on page 4.

Circuit examples: For displacement pumps (selection)

Type DBA...2X/...

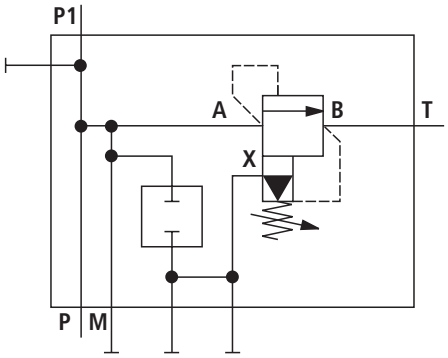

Type DBAW.B...2X/.Z

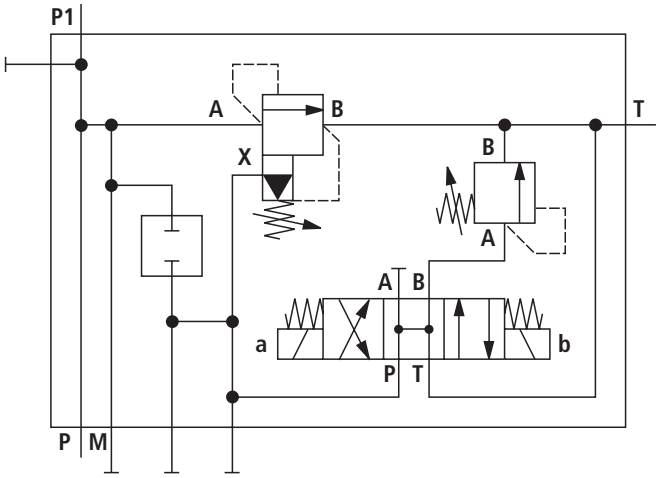

Type DBAW.A...2X/...

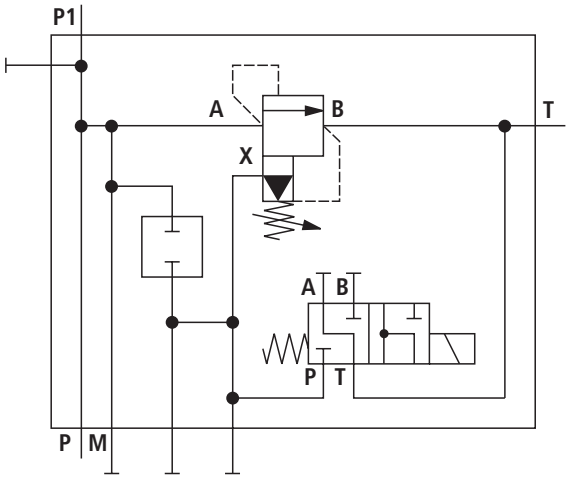

Type DBAE(E)...2X/...

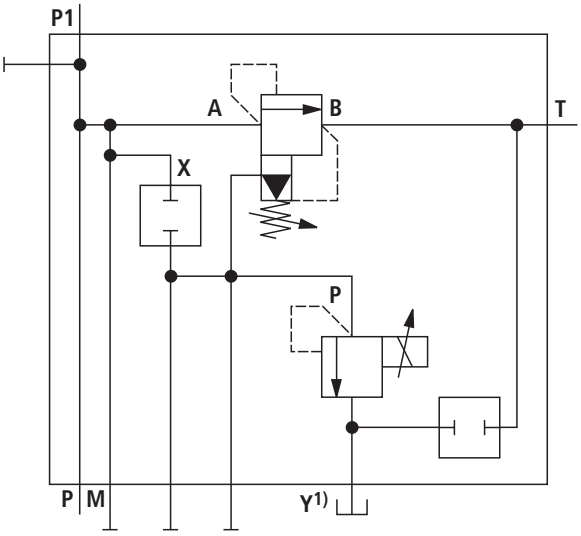

Type DBAW.B...2X/...

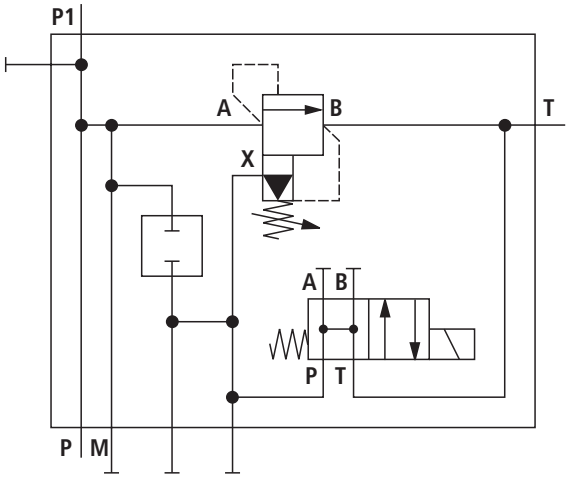

1) ☞ **Notice!**
Port Y of the proportional pressure relief valve type DBET mounted on the pump safety block type DBA must be connected to the tank in a depressurized way (possibly by means of the leakage line of the hydraulic system)!

Circuit examples: For variable displacement pump (selection)

▶ **Preferably for axial piston variable displacement pumps type A10VSO with DR, DFR1 or DFLR controller** [2)]

Type DBAW.B...2X/...A08

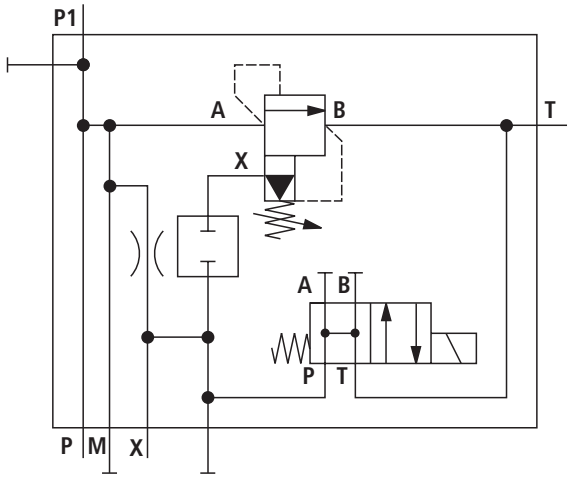

Type DBAW.B...2X/.Z...A08

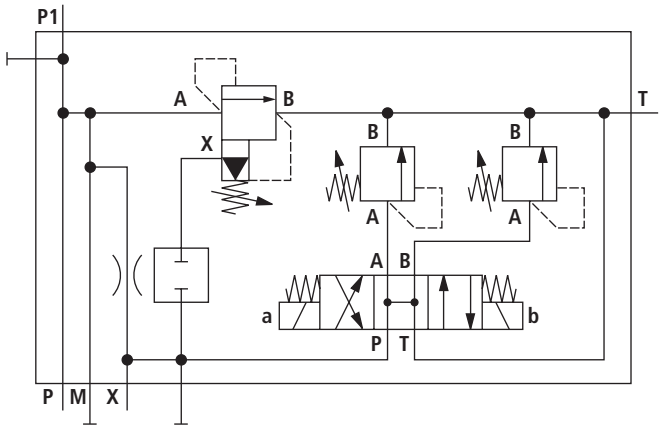

Type DBAE(E)...2X/...A08

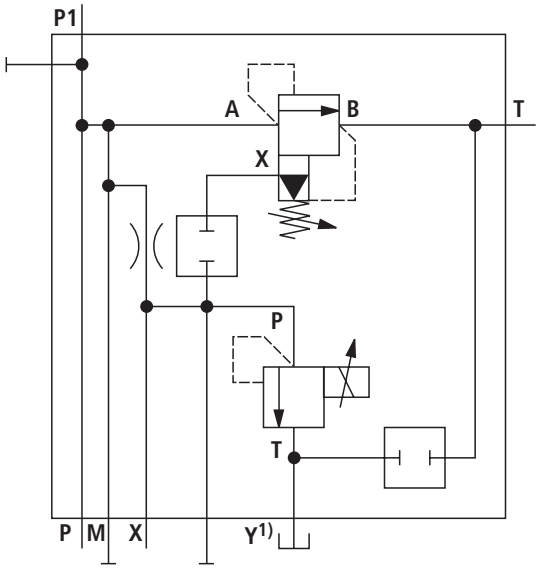

Type DBAW.B...2X/.ZZ...A08

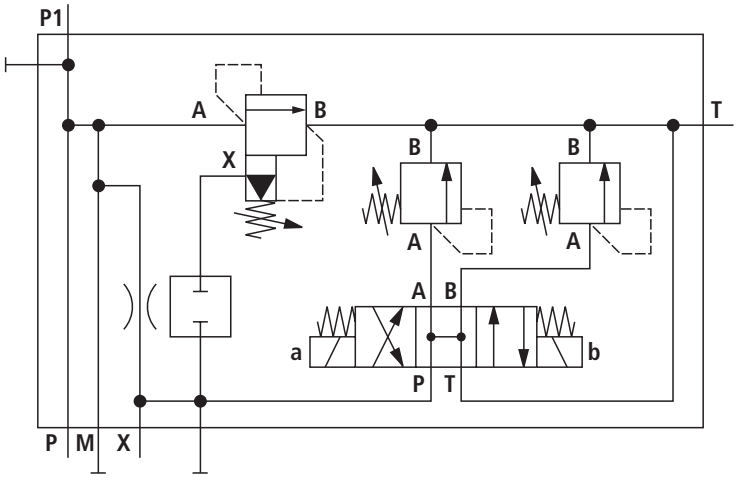

1) ☞ **Notice!**
Port Y of the proportional pressure relief valve type DBET mounted on the pump safety block type DBA must be connected to the tank in a depressurized way (possibly by means of the leakage line of the hydraulic system)!

2) ☞ **Notice!**
If used on variable displacement pumps with DFLR controller, the nozzle at port X of the pump control must be removed!

Circuit examples: For variable displacement pumps (selection)

▶ **Preferably for axial piston variable displacement pumps type A10VSO with DRG controller**

Type DBAW.B...2X/.Z...A00

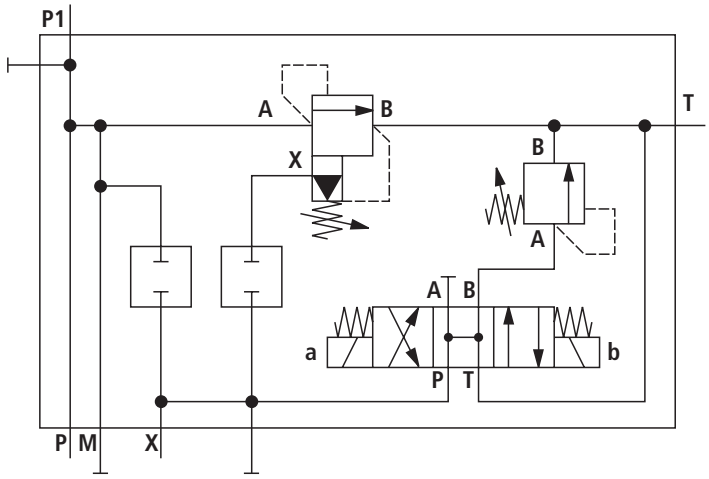

Typ DBAW.B...2X/.ZZ...A00

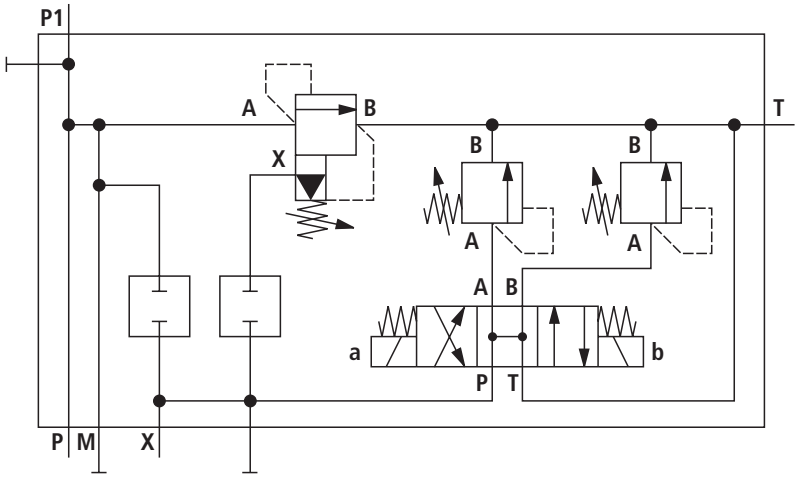

Typ DBAE(E)...2X/...A00

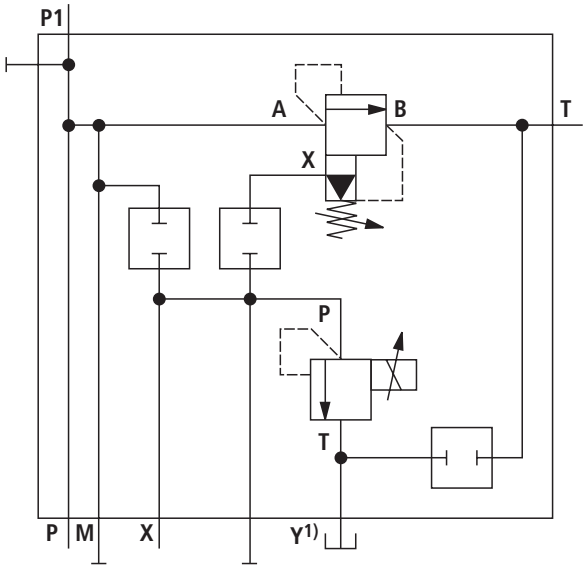

1) **Notice!**
Port Y of the proportional pressure relief valve type DBET mounted on the pump safety block type DBA must be connected to the tank in a depressurized way (possibly by means of the leakage line of the hydraulic system)!

Function, sections: Type DBA...

General

Pump safety blocks type DBA are pilot operated pressure relief valves which are integrated into a block and intended to be mounted directly onto SAE pressure ports of pumps.
They are used for limiting (type DBA) or limiting and solenoid-actuated unloading (type DBAW, DBAE) the operating pressure.
Pump safety blocks generally consist of valve block (1) and pressure limitation screw-in cartridge valve type DB 20 K (2) (data sheet 25818). Optionally, a pressure switch type HED 8 (3) (data sheet 50061) can be installed on the valve block.
The valve housing is equipped with a port P for hydraulic fluid input and port P1 for hydraulic fluid output. In a branch of the through connection between these two ports, the pressure limitation screw-in cartridge valve can be found. By opening this valve, a connection to port T (tank line) is established.
At the standard model, connection diagram size 6 is covered with the cover plate (4). The pressure in the through connection (P - P1) has an effect on the main control spool (5) of the pressure limitation screw-in cartridge valve. Via the nozzle bores (6 and 7), the pressure is at the same time applied to the poppet (8). If the pressure in port P exceeds the value set at spring (9), the poppet (8) opens against the spring (9).

Via the nozzle bores (6 and 7), the hydraulic fluid from channel P flows into the spring chamber (10) and is here internally directed via the control line (11) into the tank. Due to the state of equilibrium at the main control spool (5), hydraulic fluid flows from channel P to channel T, maintaining the set operating pressure.
A pressure gauge connection (12) allows for the control of the operating pressure.

Pump safety block type DBA...D (with pressure switch)
The use of an electrical pressure switch type HED 8 (3) (data sheet 50061) enables activation and deactivation of an electric circuit via the control line (13).
In basic design, the control line (13) is closed with a plug screw (14).

The pressure gauge connection M and tank port T are illustrated with an offset of 90°!

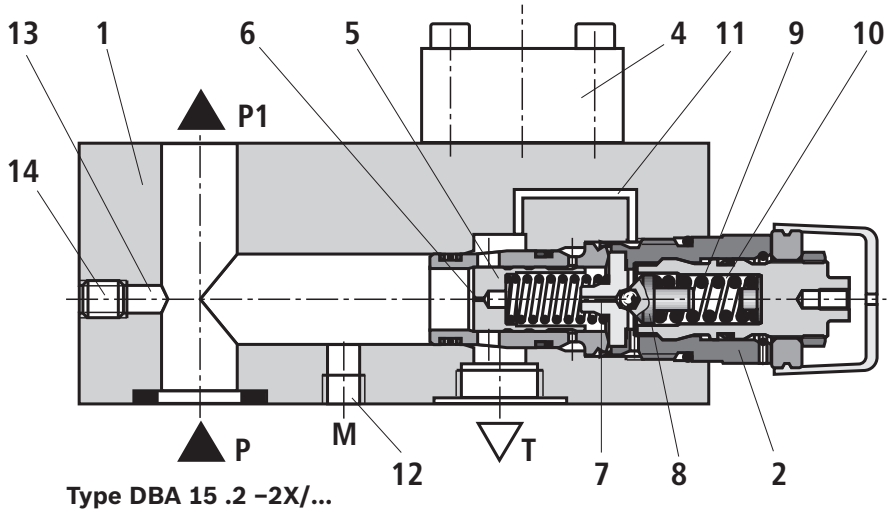

Type DBA 15 .2 –2X/...

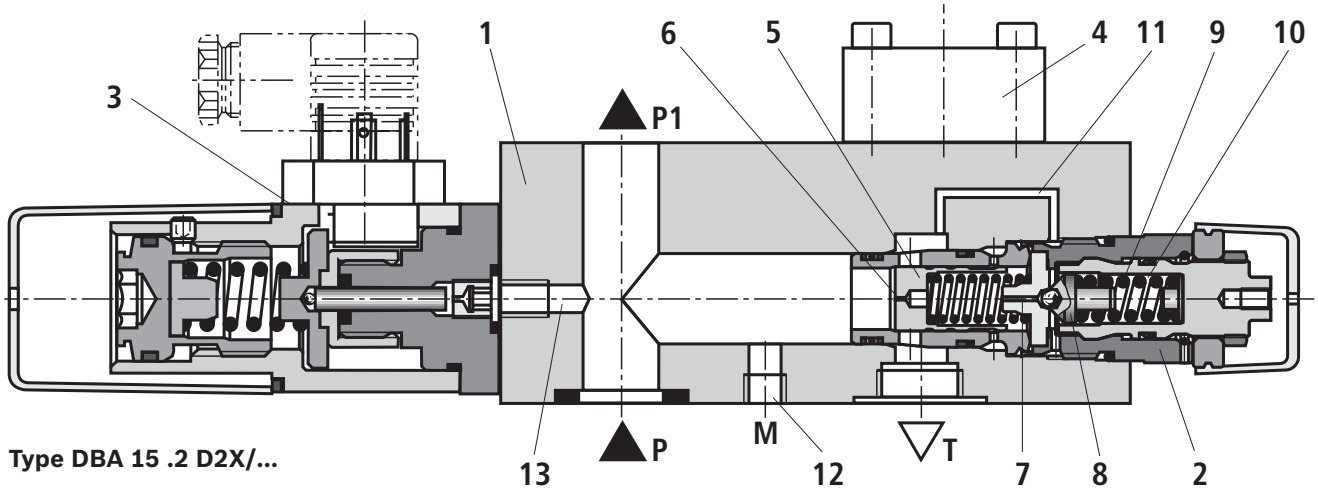

Type DBA 15 .2 D2X/...

Function, sections: Type DBAW...

Pump safety block type DBAW
The function of this block basically corresponds to the function of block type DBA.... Unloading the main control spool, however, is achieved by controlling the mounted directional valve (15). In this case, no cover plate (4) is required.

Pump safety block type DBAW.B...Z... for displacement pumps (with pressure relief valve)
In general, the function corresponds to type DBAW....
By means of the pressure relief valve type ZDB 6 (16) (data sheet 25751) and actuation of the directional valve (15), the pilot control of the pressure limitation screw-in cartridge valve type DB 20 K is deactivated and the pressure set at the pressure relief valve type ZDB 6 is activated. The pressure adjustment at the pressure relief valve type ZDB 6 only works if it is below the setting of the pressure limitation screw-in cartridge valve type DB 20 K.

Pump safety block type DBAW.B...Z...A for control pump A10V... (with pressure relief valve)
In general, the function corresponds to type DBAW....
By means of the pressure relief valve type ZDB 6 (16) (data sheet 25751) and by actuation of the directional valve (15), a pressure change is achieved at control port X. The pressure change set at the pressure relief valve type ZDB 6 acts on the controller of the pump. The pressure adjustment at the pressure relief valve type ZDB 6 only works if it is below the setting of the pressure limitation screw-in cartridge valve type DB 20 K.

Pump safety block DBAW.B...ZZ...A for control pump A10V.. (with pressure relief valve)
In general, the function corresponds to type DBAW....
By means of the pressure relief valve type Z(2)DB 6 (16) (data sheet 25751) and by actuation of the directional valve (15), two pressure adjustments are possible at control port X. The pressure adjustment at the pressure relief valve type Z(2)DB 6 only works if it is below the setting of the pressure limitation screw-in cartridge valve type DB 20 K.

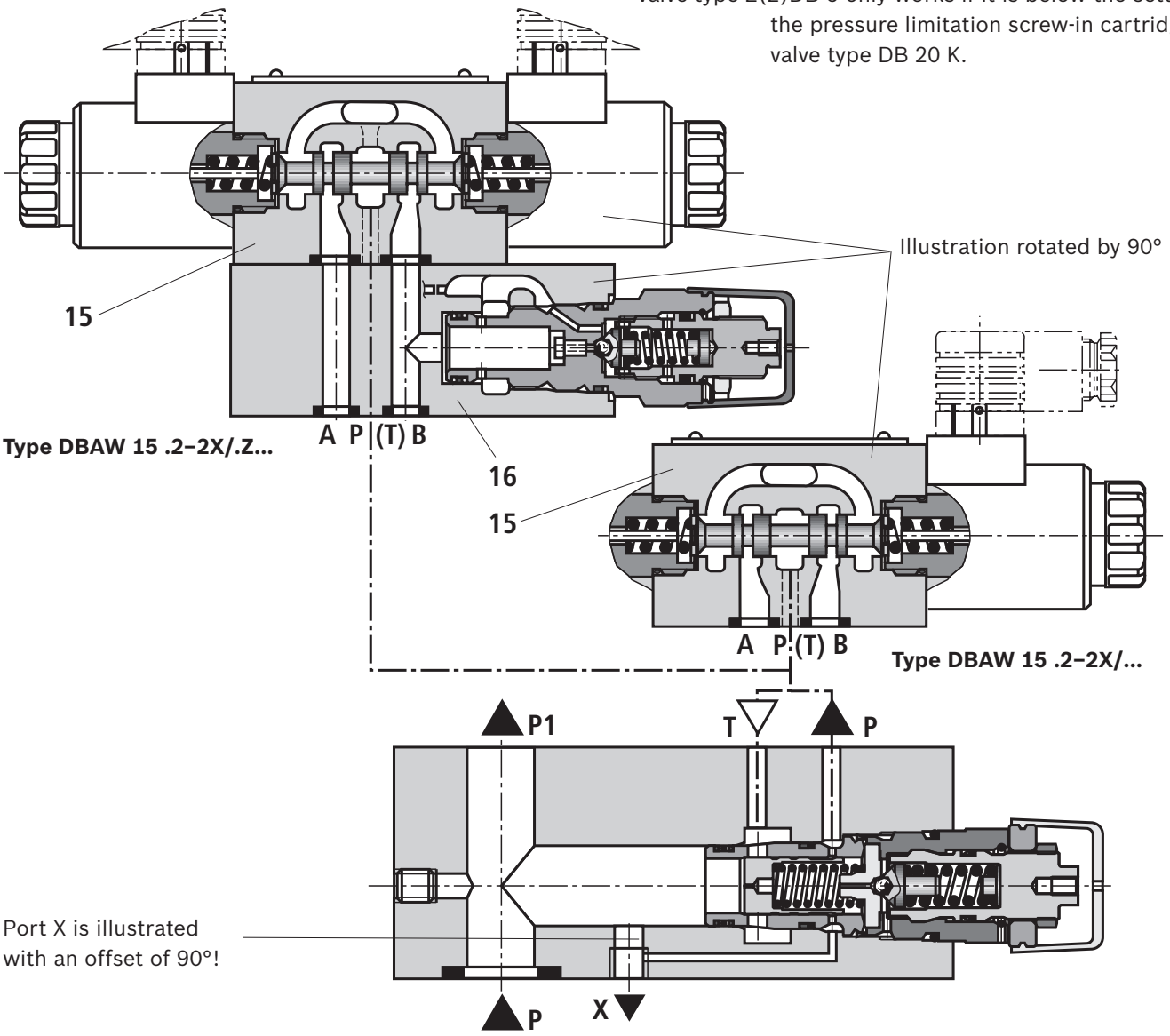

Type DBAW 15 .2–2X/.Z...

Type DBAW 15 .2–2X/...

Port X is illustrated with an offset of 90°!

Function, sections: Type DBAE(E)...

Pump safety block type DBAE(E) for displacement pump (with proportional pressure relief valve)
In general, the function corresponds to type DBA....
Unloading at the main control spool, however, is achieved by control of the mounted proportional pressure relief valve type DBET(E)-6X/.Y... (17) (data sheet 29162). The cover plate (4) is not required.

The pressure adjustment at the proportional pressure relief valve type DBET(E) only works if it is below the setting of the pressure limitation screw-in cartridge valve type DB 20 K.

Pump safety block type DBAE(E) for variable displacement pumps type A10V.. (with proportional pressure relief valve)
In general, the function corresponds to type DBA....
By means of the proportional pressure relief valve type DBET(E)-6X/.Y... (17), a pressure change is achieved at the control port X. The pressure change acts on the controller of the pump. The cover plate (4) is not required.
The pressure adjustment at the proportional pressure relief valve type DBET(E) only works if it is below the setting of the pressure limitation screw-in cartridge valve type DB 20 K.

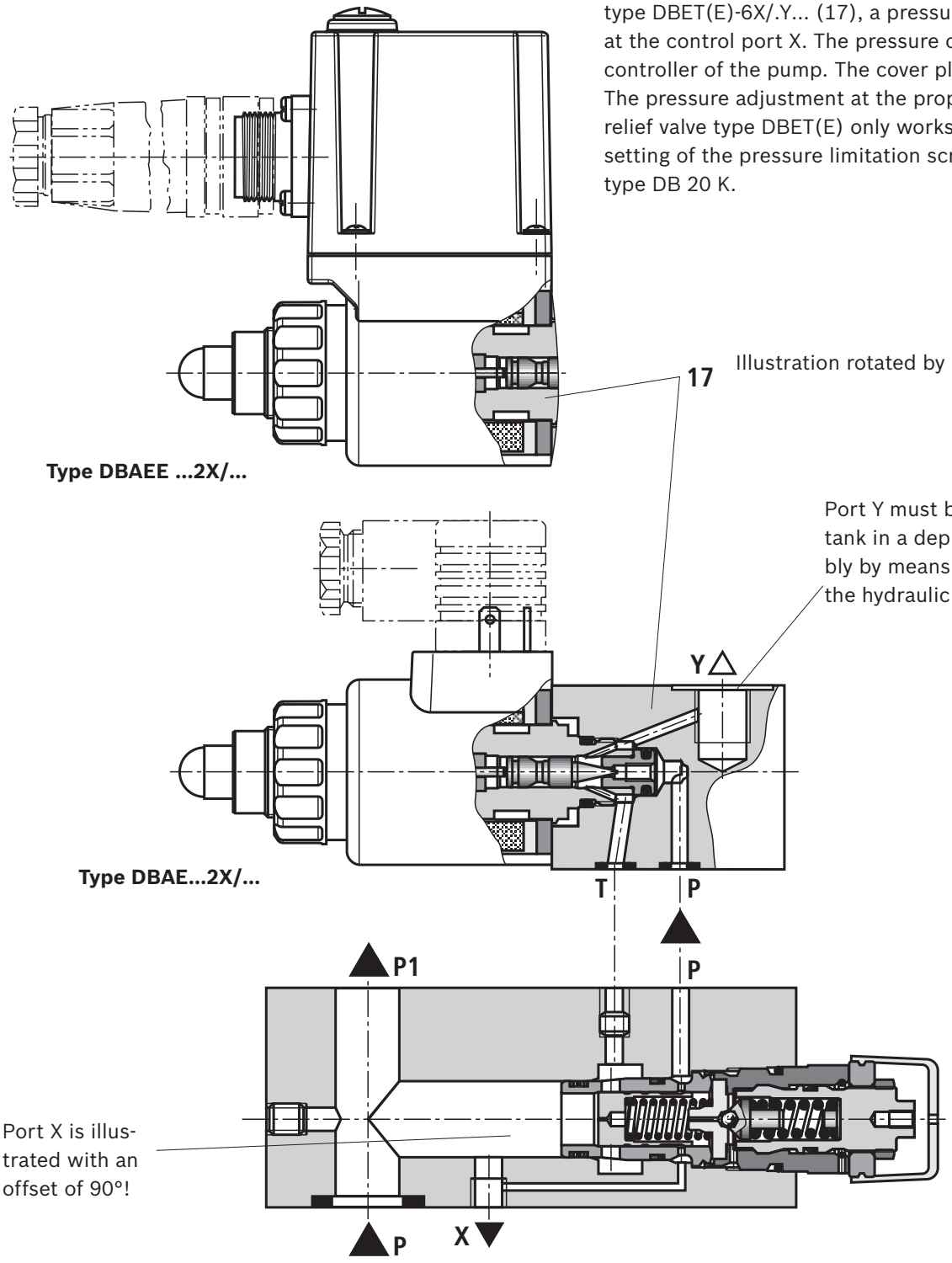

Technical data
(for applications outside these parameters, please consult us!)

general								
Size		Size	16		25		32	
Weight	Of SAE flange	psi	3000	5000	3000	5000	3000	5000
▶ Pump safety block	Type DBA...	kg	5.4	5.4	5.4	5.3	5.4	6.0
	Type DBAW...	kg	6.1	6.1	6.1	6.0	6.1	6.7
	Type DBAW...Z...	kg	7.9	7.9	7.9	7.8	7.9	8.5
	Type DBAW...ZZ...	kg	8.1	8.1	8.1	8.0	8.1	8.7
	Type DBAE...	kg	6.4	6.4	6.4	6.3	6.4	7.0
	Type DBAEE...	kg	7.0	7.0	7.0	6.9	7.0	7.6
▶ Pressure switches	Type HED 8...	kg	+0.8					
Installation position			Any					
Ambient temperature range			NBR seals			FKM seals		
	– Type DBA...	°C	–30 ... +80			–15 ... +80		
	– Type DBAW...	°C	–30 ... +50			–15 ... +50		
	– Type DBAE(E)...	°C	–20 ... +50			–15 ... +50		

hydraulic					
Maximum operating pressure	– Port P	bar	350		
Maximum counter pressure	– Type DBA...	bar	250		
– Port T	– Type DBAW...	bar	210 at DC and 160 at AC solenoids		
– Port Y	– Type DBAE(E)...	bar	Depressurized to the tank		
Minimum set pressure		bar	Flow-dependent (see characteristic curves page 13)		
Maximum set pressure		bar	50/100/200/315/350 (type HED 8: 50/100/200/350)		
Maximum flow		l/min	300	400	400
Hydraulic fluid			See table page 13		
Hydraulic fluid temperature range			NBR seals	FKM seals	
	– Type DBA(W)...	°C	–30 ... +80	–20 ... +80	
	– Type DBAE(E)...	°C	–20 ... +80	–15 ... +80	
Viscosity range	– Type DBA(W)...	mm^2/s	10 ... 800		
	– Type DBAE(E)...	mm^2/s	15 ... 380		
Maximum admissible degree of contamination of the hydraulic fluid - cleanliness class according to ISO 4406 (c)			Class 20/18/15 [1]		

[1] The cleanliness classes specified for the components must be adhered to in hydraulic systems. Effective filtration prevents faults and at the same time increases the life cycle of the components.
For the selection of the filters, see www.boschrexroth.com/filter.

Technical data
(for applications outside these parameters, please consult us!)

Hydraulic fluid		Classification	Suitable sealing materials	Standards
Mineral oils		HL, HLP	NBR, FKM	DIN 51524
Bio-degradable	– insoluble in water	HETG	NBR, FKM	VDMA 24568
		HEES [1]	FKM	
	– soluble in water	HEPG [1]	FKM	VDMA 24568
Flame-resistant	– water-free	HFDU	FKM	ISO 12922
	– containing water	HFC (Fuchs Hydrotherm 46M, Petrofer Ultra Safe 620)	NBR	ISO 12922

☞ **Important information on hydraulic fluids!**

- ▶ There may be limitations regarding the technical valve data (tem-perature, pressure range, life cycle, maintenance intervals, etc.)!
- ▶ The flash point of the hydraulic fluid used must be 40 K higher than the maximum solenoid surface temperature.
- ▶ **Flame-resistant – containing water**:
  - – Maximum pressure difference per control edge 50 bar
  - – Pressure pre-loading at the tank port >20% of the pressure differential, otherwise increased cavitation
  - – Life cycle as compared to operation with mineral oil HL, HLP 50 to 100%
- ▶ **Bio-degradable:** When using bio-degradable hydraulic fluids that are zinc-solving, zinc may accumulate in the fluid (700 mg zinc per pole tube).

[1] Not for model "DBAE(E)"

Characteristic curves
(measured with HLP46, ϑ_{oil} = 40 ± 5 °C)

Inlet pressure dependent on the flow [2]

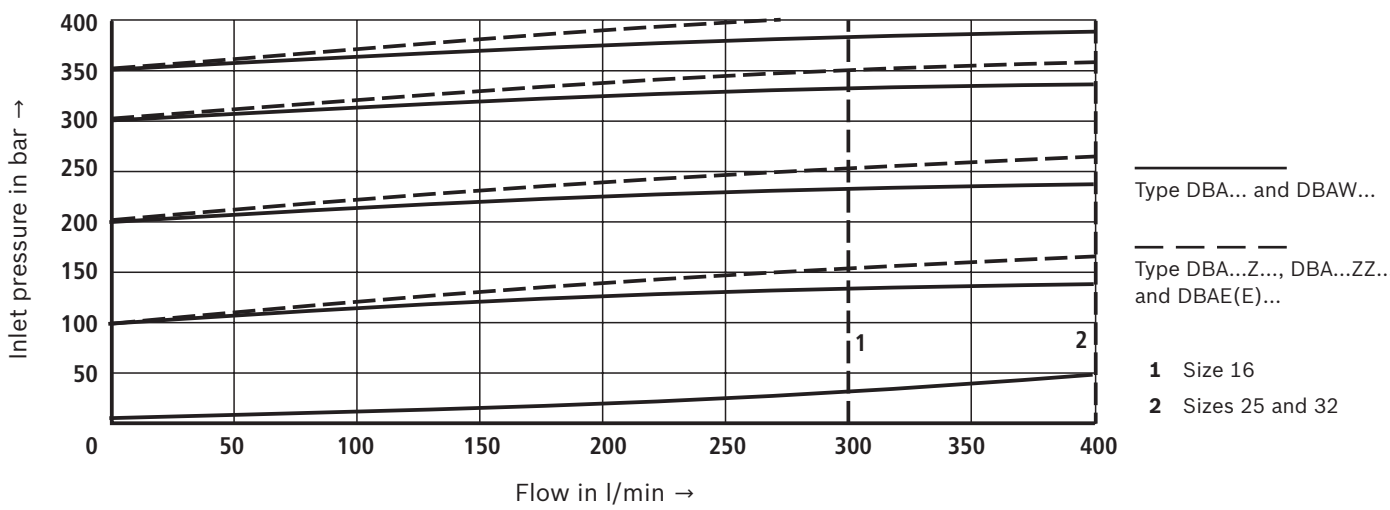

[2] The characteristic curves apply for output pressure p_T = 0 bar in the entire flow range!

☞ **Notice!**
The characteristic curves were measured with **internal pilot oil return**.
Due to the internal pilot oil return, the inlet pressure increases by the output pressure present in port T.

Characteristic curves
(measured with HLP46, ϑ_{oil} = 40 ± 5 °C)

Minimum set pressure and circulation pressure depending on the flow [1)]
Standard version

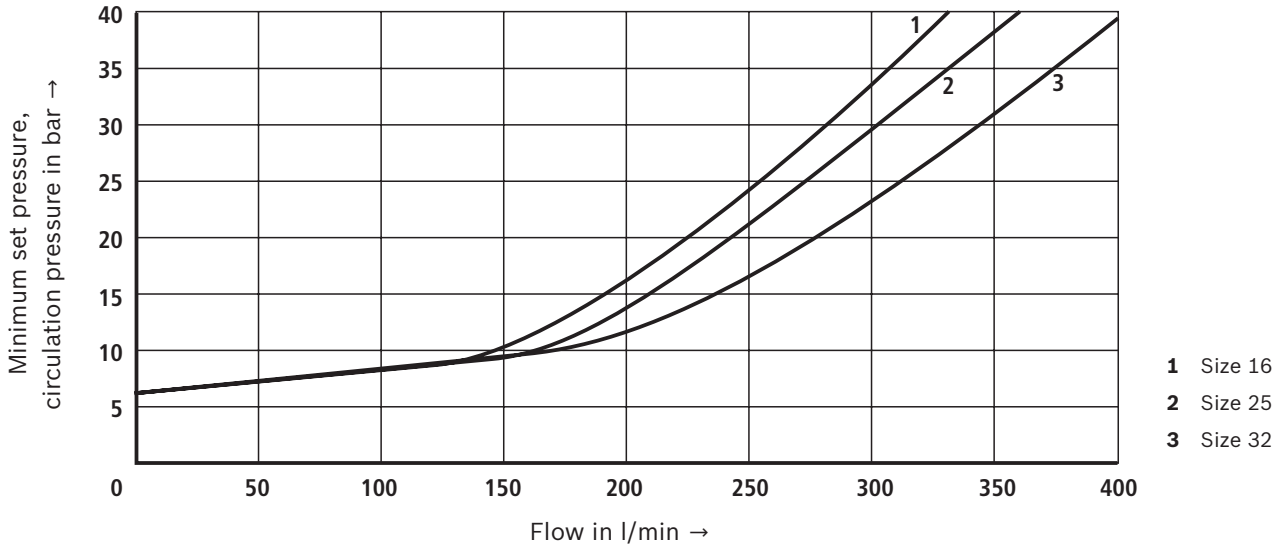

Minimum set pressure and circulation pressure depending on the flow [1)]
Model "U"

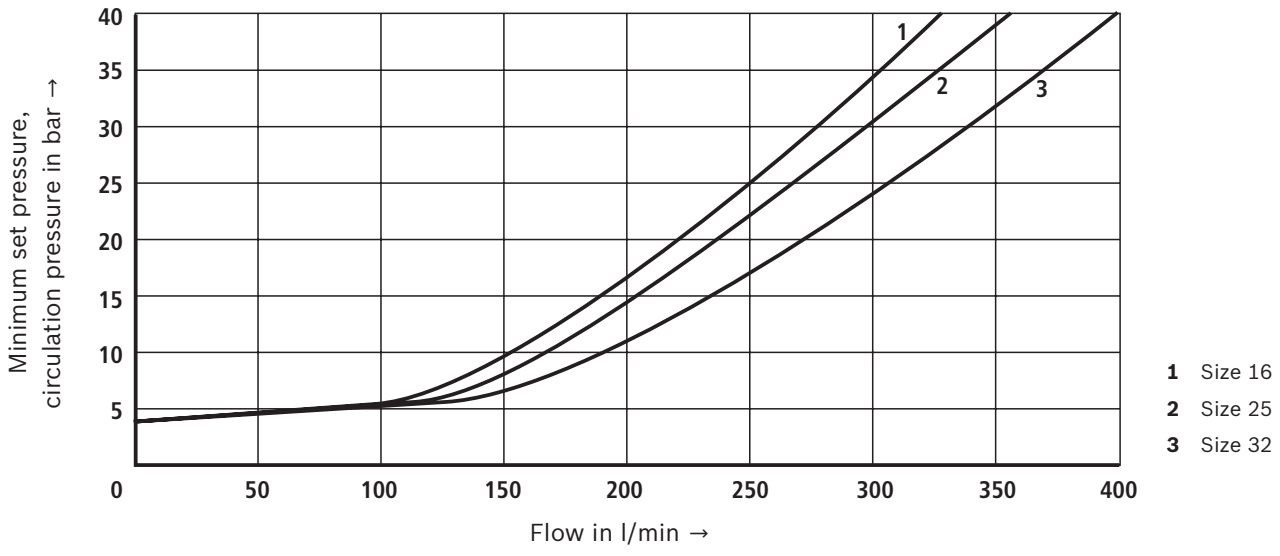

[1)] The characteristic curves apply for output pressure p_T = 0 bar in the entire flow range!

☞ **Notice!**
The characteristic curves were measured with **internal pilot oil return**.
Due to the internal pilot oil return, the inlet pressure increases by the output pressure present in port T.

Dimensions: Type DBA...
(dimensions in mm)

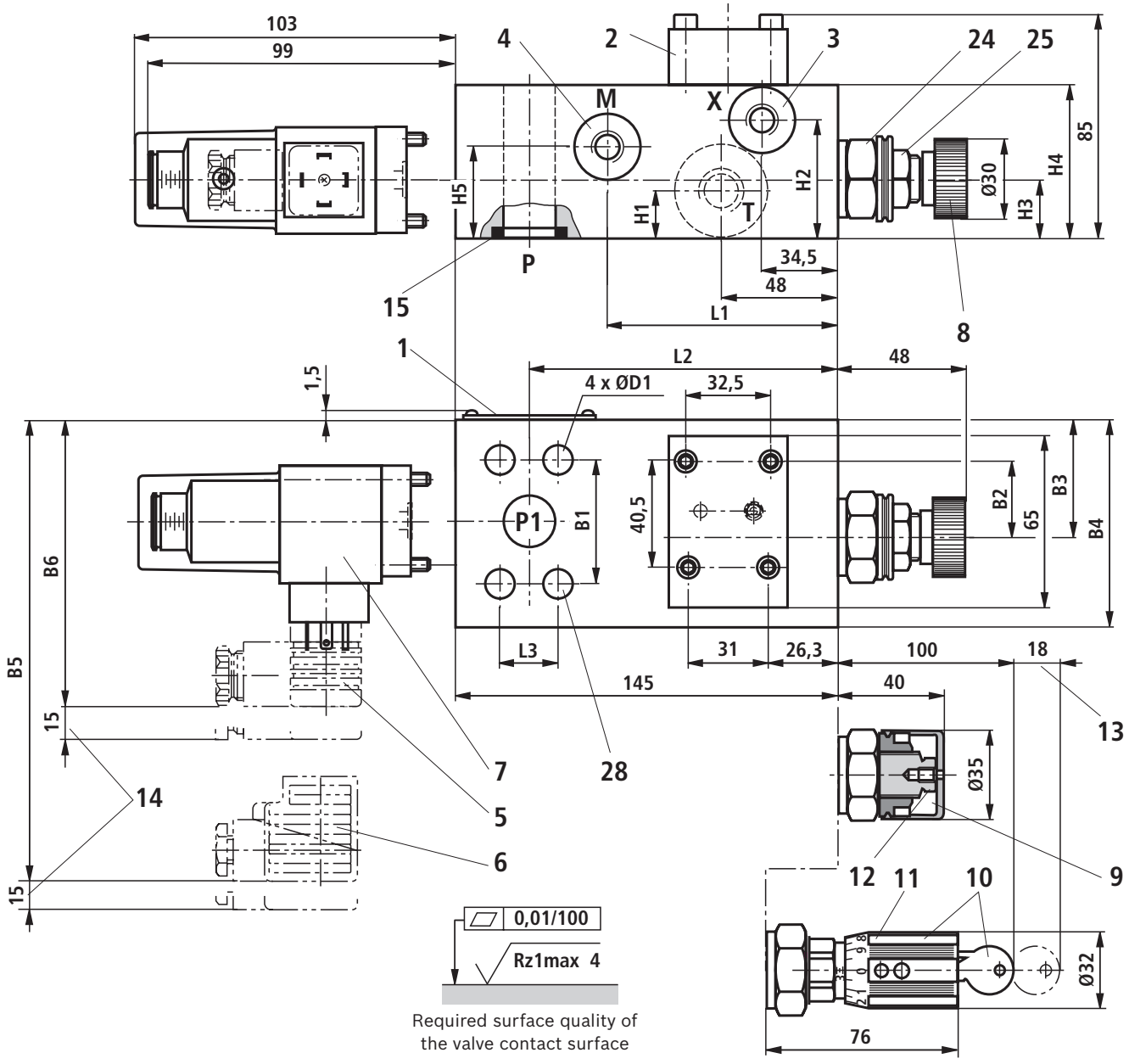

Required surface quality of the valve contact surface

Standard flanges type DBA...**F**...

Size	L1	L2	L3	B1	B2	B3	B4	B5	B6	H1	H2	H3	H4	H5	ØD1
16	88	117	22.2	47.6	28.5	45	80	110	105	24	47	22	60	37	11
25	88	115.5	26.2	52.4	28.5	45	80	110	105	24	47	22	60	37	11
32	108.5	108.5	30.2	58.7	30.5	47	80	110	105	30	47	20	60	41	11.5

High-pressure flanges type DBA...**H**...

Size	L1	L2	L3	B1	B2	B3	B4	B5	B6	H1	H2	H3	H4	H5	ØD1
16	88	117	23.8	50.8	28.5	45	80	110	105	24	47	22	60	37	11
25	84	115.5	27.8	57.2	28.5	45	80	110	105	24	47	22	60	37	13
32	108.5	108.5	31.8	66.7	26	52	90	115	110	30	50	20	64	41	15

Item explanations can be found on page 21.

Dimensions: Type DBAW...
(dimensions in mm)

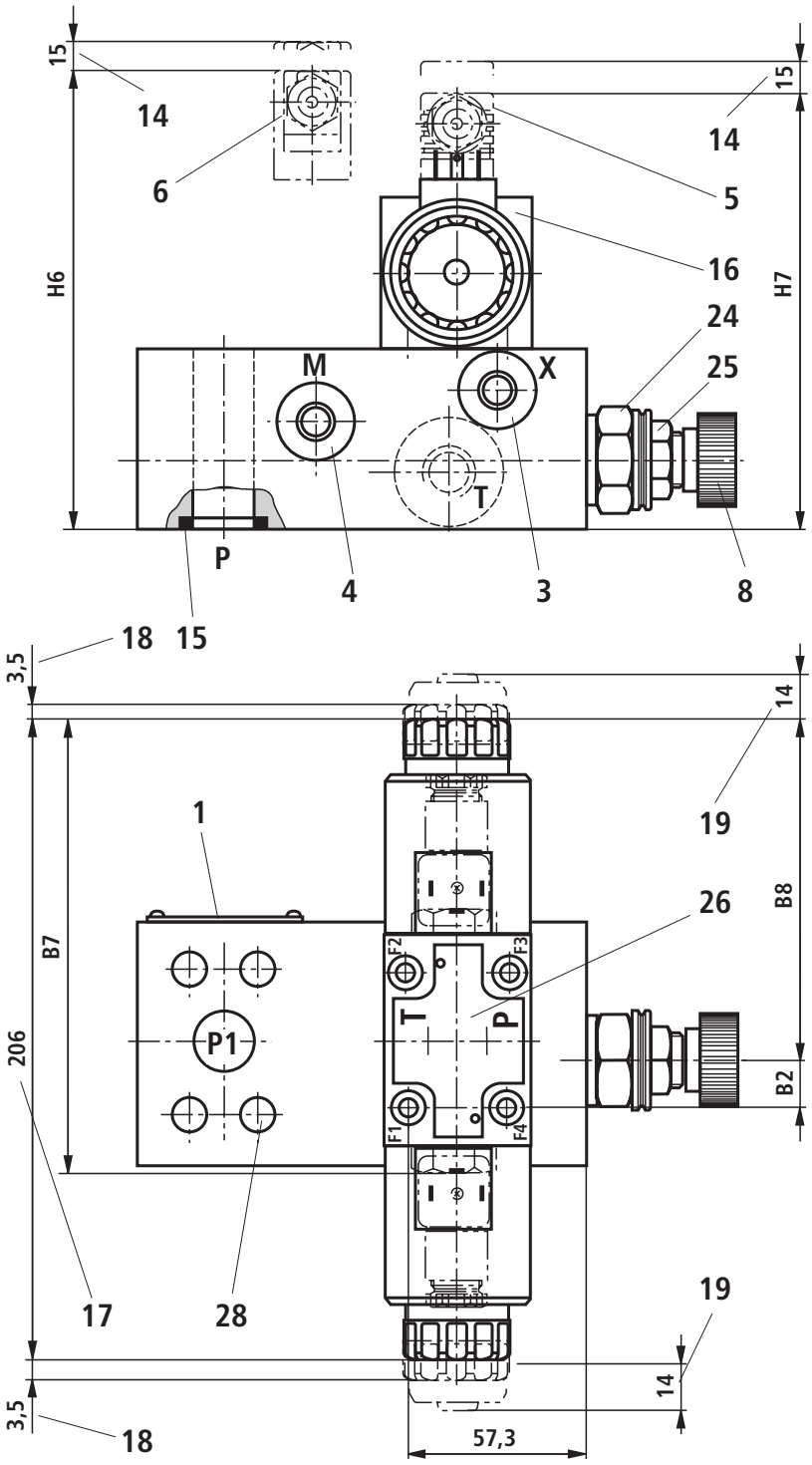

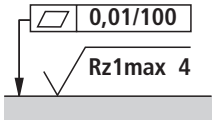

Required surface quality of the valve contact surface

Item explanations can be found on page 21, **dimensions** for pump safety block, pressure switchtype HED 8 and further adjustment types can be found on page 15.

Standard flanges type DBAW...**F**...

Size	B2	B7	B8	H6	H7
16	12	144.5	109.5	159	153
25	12	144.5	109.5	159	153
32	10	144.5	111.5	159	153

High-pressure flanges type DBAW...**H**...

Size	B2	B7	B8	H6	H7
16	12	144.5	109.5	159	153
25	12	144.5	109.5	159	153
32	14.5	145	107	163	157

Dimensions: Type DBAW...Z...
(dimensions in mm)

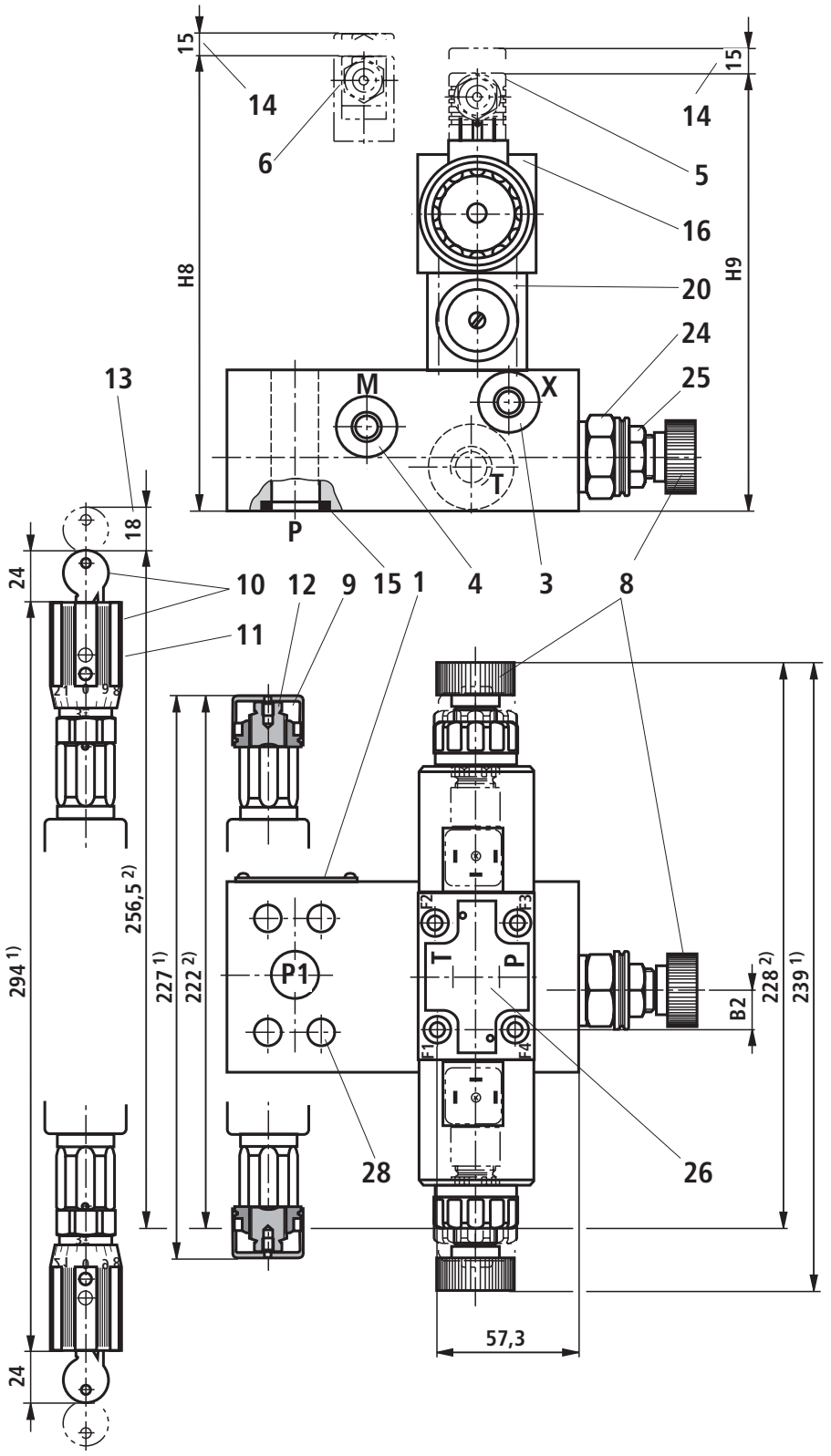

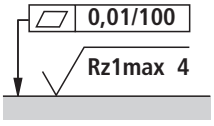

Required surface quality of the valve contact surface

Item explanations can be found on page 21, **dimensions** for pump safety block, pressure switch type HED 8 and other adjustment types can be found on page 15, **dimensions** for directional spool valves type WE can be found on page 16.

1) Model "ZZ"
2) Model "Z"

Standard flanges type DBAW..**F**...Z...

Size	B2	H8	H9
16	12	199	193
25	12	199	193
32	10	199	193

High-pressure flanges type DBAW..**H**...Z...

Size	B2	H8	H9
16	12	199	193
25	12	199	193
32	14.5	203	197

Dimensions: Type DBAE...
(dimensions in mm)

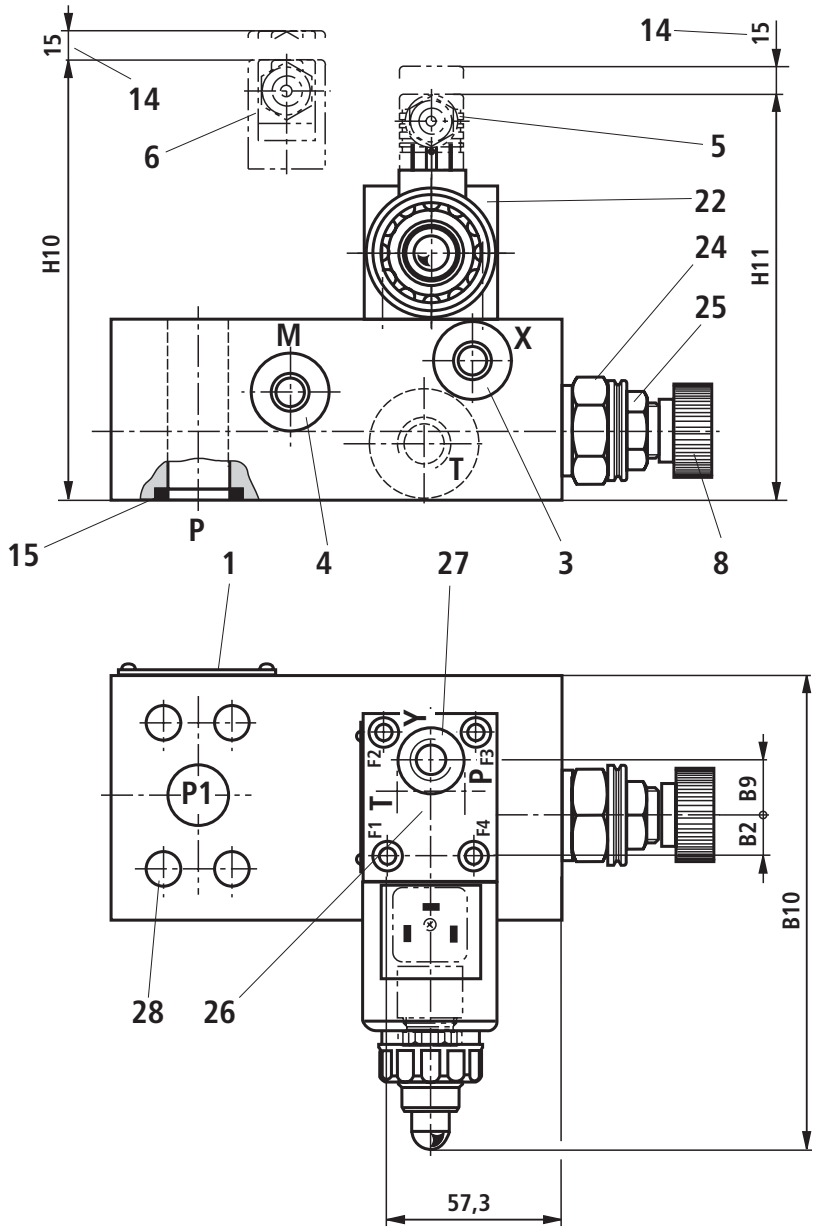

Item explanations can be found on page 21, **dimensions** for pump safety block, pressure switch type HED 8 and further adjustment types can be found on page 15.

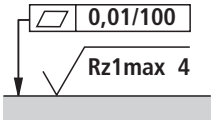

Required surface quality of the valve contact surface

Standard flanges type DBAE(E)...**F**

Size	B2	B9	B10	H10	H11
16	12	18.8	158	161	155
25	12	18.8	158	161	155
32	10	20.8	158	161	155

High-pressure flanges type DBAE(E)...**H**

Size	B2	B9	B10	H10	H11
16	12	18.8	158	161	155
25	12	18.8	158	161	155
32	14.5	16.3	169	166	160

Dimensions: Type DBAEE...
(dimensions in mm)

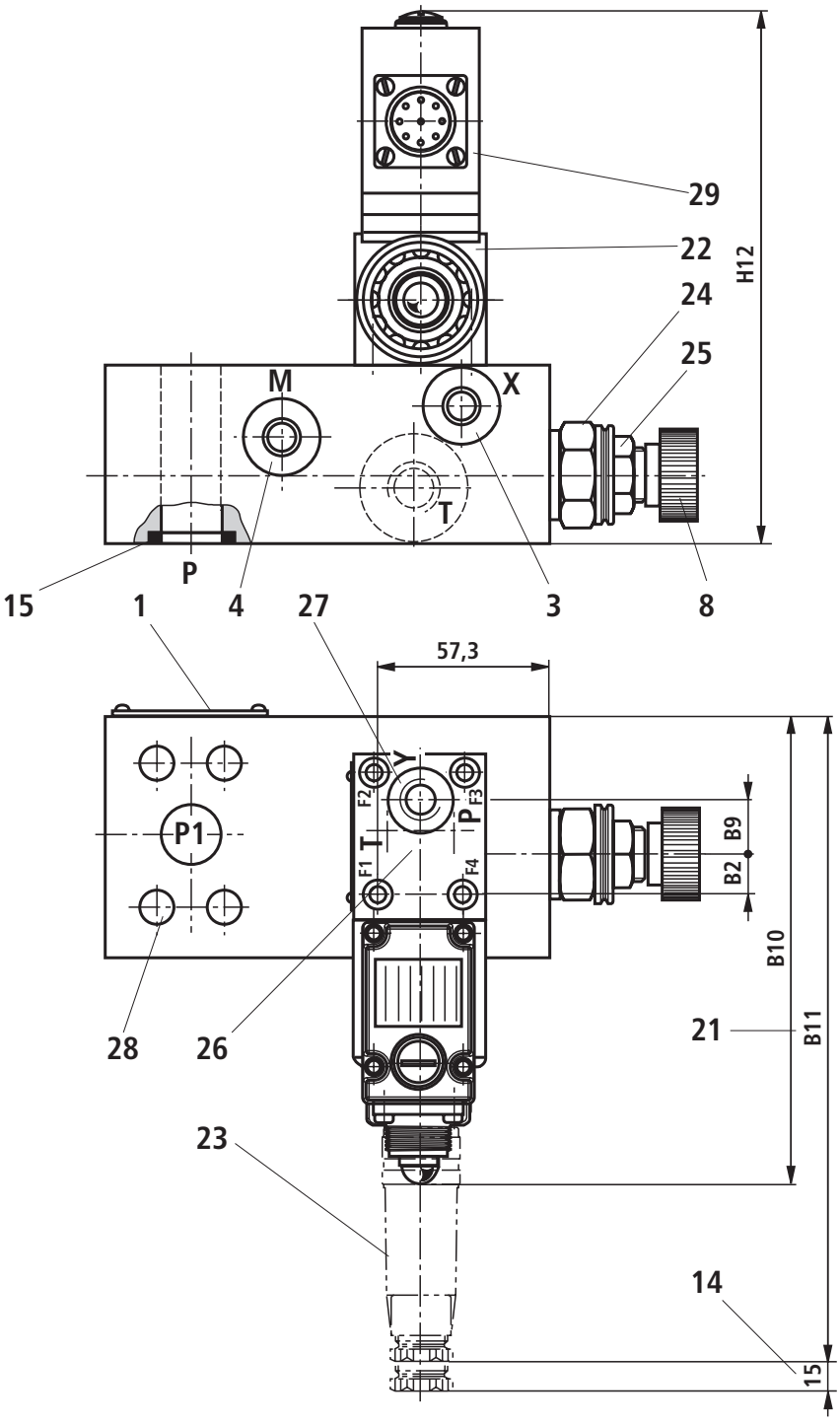

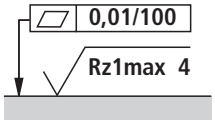

Required surface quality of the valve contact surface

Item explanations can be found on page 21, **dimensions** for pump safety block, pressure switchtype HED 8 and further adjustment types can be found on page 15.

Standard flanges type DBAE(E)...**F**

Size	B2	B9	B10	B11	H12
16	12	18.8	158	225	175
25	12	18.8	158	225	175
32	10	20.8	158	225	175

High-pressure flanges type DBAE(E)...**H**

Size	B2	B9	B10	B11	H12
16	12	18.8	158	225	175
25	12	18.8	158	225	175
32	14.5	16.3	169	235	179

Dimensions
(dimensions in mm)

Standard flanges type DBA...**F**... according to DIN ISO 6162-1

Size	Line connections			4 valve mounting screws ISO 4762 - 10.9 [1]	Tightening torque M_A in Nm [2]
	P and P1	T	X, M		
16	SAE 3/4"	G3/4	G1/4	M10 x 95	52
25	SAE 1"	G1	G1/4	M10 x 95	52
32	SAE 1 1/4"	G1 1/4	G1/4	M10 x 95	52

Admissible pressures (flange connections according to DIN ISO 6162-1)		
	in psi	in bar
SAE 3/4"	5000	350
SAE 1"	4500	315
SAE 1 1/4"	3600	250

High-pressure flanges type DBA...**H**... according to DIN ISO 6162-2

Size	Line connections			4 valve mounting screws ISO 4762 - 10.9 [1]		Tightening torque M_A in Nm [2]
	P and P1	T	X			
16	SAE 3/4"	G3/4	G1/4	M10 x 95		52
25	SAE 1"	G1	G1/4	M12 x 105		66
32	SAE 1 1/4"	G1 1/4	G1/4	M14 x 105		113

Admissible pressures (flange connections according to DIN ISO 6162-2)		
	in psi	in bar
SAE 3/4"	5000	350
SAE 1"	5000	350
SAE 1 1/4"	5000	350

[1] **Valve mounting screws** (separate order)
4 hexagon socket head cap screws ISO 4762 - 10.9-flZn-240h-L
(for friction coefficient μ_{total} = 0.09 to 0.14)

☞ **Notice!**
For reasons of stability, other valve mounting screws must not be used!
Depending on the operating pressure, flange height and thread depth of the pump plate, other screw lengths may be necessary!

[2] ☞ **Notice!**
The tightening torques stated are guidelines when using screws with the specified friction coefficients and when using a manual torque wrench (tolerance ±10%).

Dimensions

1 Name plate
2 Cover plate type HSA 06 A001-3X...
3 Port X for variable displacement pump type A10VSO (otherwise closed); G1/4
4 Port M for pressure gauge; G1/4
5 Mating connector **without** circuitry (separate order, see page 24)
6 Mating connector **with** circuitry (separate order, see page 24)
7 Pressure switch type HED 8 OH...
8 Adjustment type "1" [1)]
9 Adjustment type "2" [1)]
10 Adjustment type "3" [1)]
11 Adjustment type "7" [1)]
12 Hexagon SW10
13 Space required to remove the key
14 Space required for removing the mating connector
15 Seal ring
16 Directional spool valve type WE 6
17 Dimensions for solenoid **with concealed** manual override "**N9**" (standard) – The manual override can only be operated up to approx. 50 bar tank pressure. Avoid damage to the bore of the manual override!
18 Dimensions for valve **with** manual override "**N**"
19 Dimensions for valve **without** manual override
20 Pressure relief valve (sandwich plate) type Z(2)DB 6 ...
21 Dimensions for valve with integrated electronics type DBAEE...
22 Proportional pressure relief valve type DBET(E)-6X.Y...
23 Mating connector for type DBAEE according to DIN EN 175201-804
24 Hexagon SW30, tightening torque M_A = 50 Nm
(For tightening, a manual torque wrench with a tolerance of ≤10% must be used.)
25 Lock nut SW22, tightening torque M_A = 10±5 Nm
26 Porting pattern according to DIN 24340 form A (without locating hole), or ISO 4401-03-02-0-05 (with locating hole for locking pin ISO 8752-3x8-St)
27 Port Y (G1/4) must be connected to the tank in a depressurized way (possibly by means of the leakage line L of the hydraulic system)!
28 Valve mounting bores
29 Integrated electronics (OBE)

[1)] **Type DBAW...Z**:
Identical adjustment types for pressure limitation screw-in cartridge valve type DB 20 K and pressure relief valve type Z(2)DB 6!

Admissible pumps: Standard flange (3000 psi)

Pump safety block			**Size 16**	**Size 25**	**Size 32**
	Port P	Data sheet	SAE 3/4"	SAE 1"	SAE 1 1/4"
Pump type	▶ **Variable displacement pump**				
	Type A10VO, series 31	92701	A10VO28 –	A10VO45 A10VO71	– –
	Type A10VO, series 5X	92703	A10VO28 –	A10VO45 A10VO60	– –
	Type A10VSO, series 31	92711	A10VO28 – AV10SO18	A10VSO45 A10VSO71 –	– – –
	Type A10VSO, series 32	92714	–	A10VSO71	–
	▶ **Internal gear pump**				
	Type PGF3, component series 3X [1]	10213	PGF3-3X/020 PGF3-3X/025 PGF3-3X/032 PGF3-3X/040	– – – –	– – – –
	Type PGP3, component series 3X [1]	10231	PGP3-3X/032	–	–
	▶ **Vane pump** [2]				
	Type PV7, component series 1X	10515	– –	– –	PV7-1X/63-71 PV7-1X/63-94

1) When using the pump in combination with a SAE flange as pressure connection, the ordering code of the pump contains "..07..".

2) Depending on the drive motor, a distance plate may be required, e.g.
Height = 23 mm,
or alternatively a 90° plate:
Height = 40 mm,

Admissible pumps: High-pressure flange (5000 psi)

Pump safety block			**Size 16**	**Size 25**	**Size 32**
	Port P	Data sheet	SAE 3/4"	SAE 1"	SAE 1 1/4"
Pump type	▶ **Displacement pump**				
	Type A2FO, series 6	91401	A2FO45 A2FO56 A2FO63 – –	A2FO80 A2FO90 A2FO107 – –	A2FO125 A2FO160 A2FO180 A2FO200 A2FO250
	Type A4FO, series 1	91455	–	A4FO71	–
	Type A4FO, series 3	91455	A4FO16 A4FO22 A4FO40	– –	A4FO125 –
	▶ **Variable displacement pump**				
	Type A4VSO, series 1	92050	A4VSO40	A4VSO71	–
	Type A4VSO, series 3	92050	– –	– –	A4VSO125 A4VSO180
	Type A11VO, series 1	92500	A11VO40 A11VO60 –	A11VO75 A11VO95 A11VO130 [3] A11VO145 [3]	A11VLO130 [2] A11VLO145 [2] – –
	Type A10VSO, series 31 Type A10VSO, series 32	92711 92714	– –	– –	A10VSO100 A10VSO140
	Type A10VO, series 31	92701	– –	– –	A10VO100 A10VO140
	Type A10VO, series 5X [1]	92703	–	–	A10VO85
	Type A7VO, series 6 [1]	92202	A7VO28 A7VO55	A7VO80 A7VO107	A7VO160 –
	Type A7VO, series 6 [1]	92203	–	–	A7VO250
	▶ **Adjustable double pump**				
	Type A8VO, series 6X	93010	A8VO55 – –	A8VO80 A8VO107 A8VO140	A8VO200 – –
	▶ **Internal gear pump**				
	Type PGH4, PGH5, component series 2X	10223	PGH4-2X/020 PGH4-2X/025 PGH4-2X/032 PGH4-2X/040	PGH4-2X/050 PGH5-2X/063 – –	PGH5-2X/080 PGH5-2X/100 PGH5-2X/125 –
	Type PGH4, PGH5, component series 3X	10227	PGH4-3X/020 PGH4-3X/025 –	PGH4-3X/032 PGH4-3X/040 PGH4-3X/050	PGH5-3X/063 PGH5-3X/080 –

[1] A direct pressure switch attachment opposite of the pressure limitation screw-in cartridge valve type DB 20 K is not possible!

[2] With charging pump

[3] Without charging pump