4WRLE - Пропорциональный серворaспределитель Ду10 - Ду27 с обратной связью по положению золотника и со встроенным усилителем (OBE)

Directional control valves, pilot-operated, with electrical position feedback and integrated electronics (OBE)

Type 4WRLE

- Size 10 ... 25
- Component series 4X
- Maximum operating pressure 350 bar
- Rated flow 60 ... 600 l/min (***Δp*** = 10 bar)

Аналог клапанов Bosch Rexroth

Features

- Reliable - proven and robust design
- Safe
  - The control spool of the pilot control valve is in the "fail-safe" position when the unit is switched off
  - The control spool of the main valve is in the spring-centered central position and/or in the offset position
- High quality – control spool and sleeve of the pilot control valve in servo quality
- Flexible – suitable for position, velocity and pressure control
- Precise – high response sensitivity and little hysteresis

Contents

Features	1
Ordering code	2, 3
Symbols	4
Function, section	5, 6
Pilot oil supply	7, 8
Technical data	8 ... 10
Block diagram/controller function block	11
Electrical connections and assignment	12
Characteristic curves	13 ... 26
Dimensions	27 ... 31
Accessories	31
Further information	32

 www.belimportsnab.by

Ordering code

01	02	03	04	05	06	07	08		09		10	11		12	13	14
4	**WRL**	**E**					**J**	**–**	**4X**	**/**			**/**	**24**		*****

01	4 main ports	**4**

02	Directional control valve, pilot-operated	**WRL**

03	With integrated electronics	**E**

04	Size 10	**10**
	Size 16	**16**
	Size 25	**25**
	Size 27	**27**
	Size 35	**35**

05	Symbols e.g. E, E1-, W6- etc.; possible version see page 4	

Rated flow (***Δp*** = 5 bar/control edge)

06	**– Size 10**	
	60 l/min (only symbol E, E1-, W6-, W8-, V, V1-)	**60**
	100 l/min	**100**
	– Size 16	
	200 l/min (only symbol W6- and W8-) [1)]	**200**
	250 l/min (only symbol E, E1-, V, V1- and Q3-)	**250**
	– Size 25	
	350 l/min (only symbol W6- and W8-) [1)]	**350**
	400 l/min (only symbol E, E1-, V, V1- and Q3-)	**400**
	– Size 27	
	430 l/min (only symbol W6- and W8-) [1)]	**430**
	600 l/min (only symbol E, E1-, V, V1- and Q3-)	**600**

Flow characteristic

07	Linear	**L**
	Linear with fine control range (available for NG10, other sizes on request)	**P**
	Progressive with linear fine control (only symbol Q3-)	**M**

08	Overlap jump (opening point 5% with covered valve; only symbols E, E1-, W6-, W8-)	**J**

09	Component series 40 ... 49 (40 ... 49: unchanged installation and mounting dimensions)	**4X**

Seal material

10	NBR seals	**M**
	FKM seals	**V**
	Observe compatibility of seals with hydraulic fluid used	

Pilot oil flow

11	External pilot oil supply, external pilot oil return	**XY**
	Internal pilot oil supply, external pilot oil return	**PY**
	Internal pilot oil supply; internal pilot oil return	**PT**
	External pilot oil supply, internal pilot oil return	**XT**

www.belimportsnab.by

www.belimportsnab.by

Ordering code

01	02	03	04	05	06	07	08		09		10	11		12	13	14
4	**WRL**	**E**					**J**	**–**	**4X**	**/**			**/**	**24**		*****

12	Supply voltage 24 V	**24**

Interfaces of the control electronics

13	Command value input ±10 V	**A1**
	Command value input 4 ... (12) ... 20 mA	**F1**

14	Further details in the plain text	*****

1) Higher rated flow upon request

www.belimportsnab.by

www.belimportsnab.by

Symbols

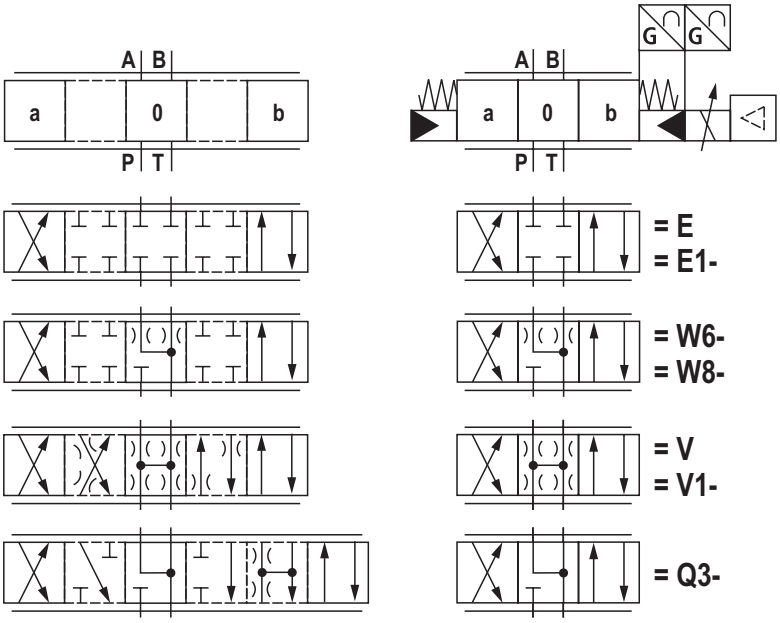

With symbol E1–, V1– and W8–:

P → A: $q_{V\,max}$ B → T: $q_V/2$
P → B: $q_V/2$ A → T: $q_{V\,max}$

Version	simple	detailed
"XY"	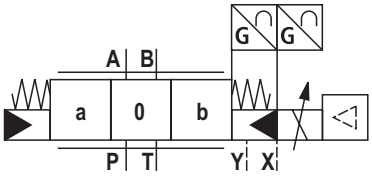	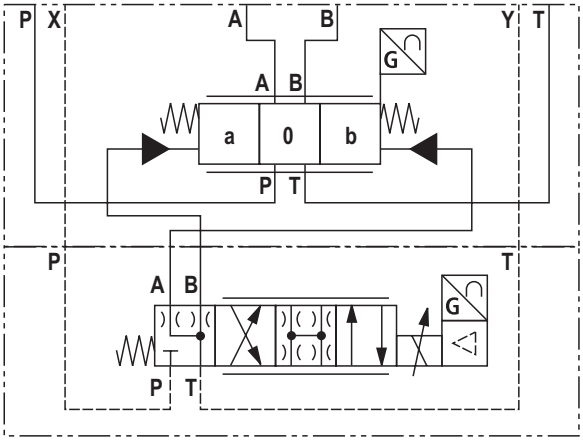
"PY"	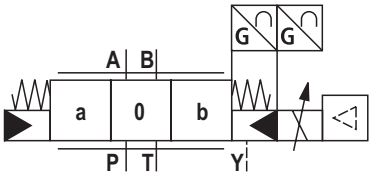	
"PT"	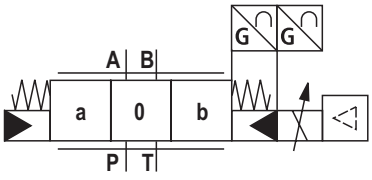	
"XT"	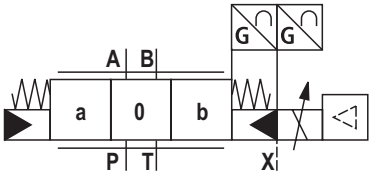	

Notice:

- Representation according to DIN ISO 1219-1. Hydraulic interim positions are shown by dashes.
- For information on the "switch-off behavior", refer to "Technical data" on page 10.

www.belimportsnab.by

www.belimportsnab.by

Function, section: Symbol E. and W.

The valve type 4WRLE is a pilot-operated directional control valve with electrical position feedback and integrated electronics (OBE).

Set-up
The valve basically consists of 3 main assemblies:
- Pilot control valve (1) with control spool and sleeve, return spring, control solenoid and inductive position transducer
- Main valve (2) with centering spring and position feedback
- Integrated control electronics (OBE) (3)

Function
When the integrated control electronics (OBE) is switched off or inactive, the control spool of the pilot control valve is spring-operated in the "fail-safe" position. The control spool of the main valve is its spring-centered central position.
The integrated control electronics (OBE) compares the specified command value to the position actual value of the main valve control spool. In case of control deviations, the control solenoid will be activated. Due to the changed magnetic force, the pilot control spool is adjusted against the spring.

The flow which is activated via the control cross-sections leads to an adjustment of the main control spool. The stroke/control cross-section of the main control spool is regulated proportionally to the command value.
The pilot oil supply in the pilot control valve is either internal via port P or external via port X. The feedback can be internal via port T or external via port Y to the tank.

Failure of supply voltage
If the supply voltage fails or in case of cable break, the integrated electronics will de-energize the control solenoid, the pilot control spool will move to the "fail safe" position and will unload the pilot oil chambers of the main valve. Operated by the spring, the main valve control spool will move to the central position.

☞ **Notice:**
Pilot-operated 4/3-directional control valves with positive overlap are functional in controlled or regulated axes. The overlap in the de-energized state is approx. 20% of the control spool stroke.
While the electrical supply voltage is switching off, the drive may be accelerated for a short time in functional direction P to B.

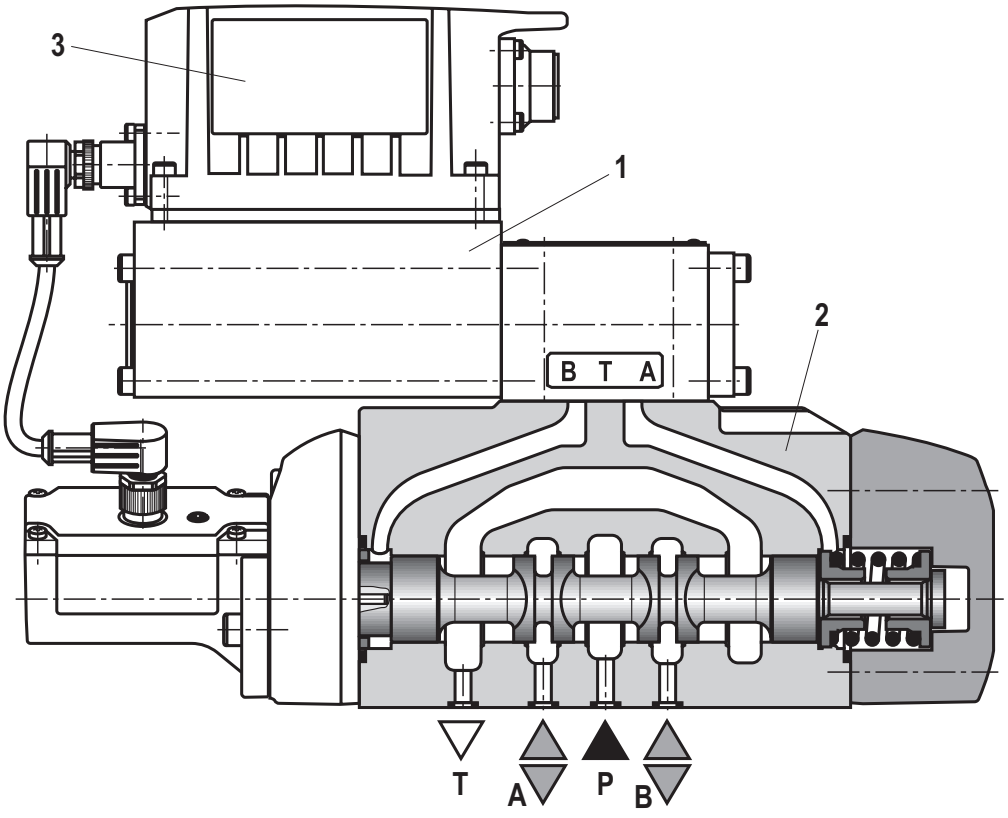

www.belimportsnab.by

www.belimportsnab.by

Function, section: Symbol V and V1-

The valve type 4WRLE is a pilot-operated directional control valve with electrical position feedback and integrated electronics (OBE).

Set-up

The valve basically consists of 3 main assemblies:

- Pilot control valve (1) with control spool and sleeve, return spring, control solenoid and inductive position transducer
- Main valve (2) with centering spring and position feedback
- Integrated control electronics (OBE) (3)

Function

When the integrated control electronics (OBE) is switched off or inactive, the control spool of the pilot control valve is spring-operated in the "fail-safe" position. The control spool of the main valve is in its spring-centered offset position at approx. 6% of the stroke in direction P to B/A to T.

The integrated control electronics (OBE) compares the specified command value to the position actual value of the main valve control spool. In case of control deviations, the control solenoid will be activated. Due to the changed magnetic force, the pilot control spool is adjusted against the spring.

The flow which is activated via the control cross-sections leads to an adjustment of the main control spool. The stroke/control cross-section of the main control spool is regulated proportionally to the command value. In case of a command value presetting of 0 V, the electronics adjust the control spool of the main valve to central position.

The pilot oil supply in the pilot control valve is either internal via port P or external via port X. The feedback can be internal via port T or external via port Y to the tank.

Failure of supply voltage

If the supply voltage fails or in case of cable break, the integrated electronics will de-energize the control solenoid, the pilot control spool will move to the "fail-safe" position and will unload the pilot oil chambers of the main valve. Operated by the spring, the main valve control spool will move to the offset position (approx. 6% P to B/A to T).

☞ **Notice:**

Pilot-operated 4/3 directional control valves are only functional in the active control loop and do not have a locking basic position when deactivated. Consequently "external isolator valves" are required in many applications and must be taken into account regarding the switch-on/switch-off order.

While the electrical supply voltage is switching off, the drive may be accelerated for a short time in functional direction P to B.

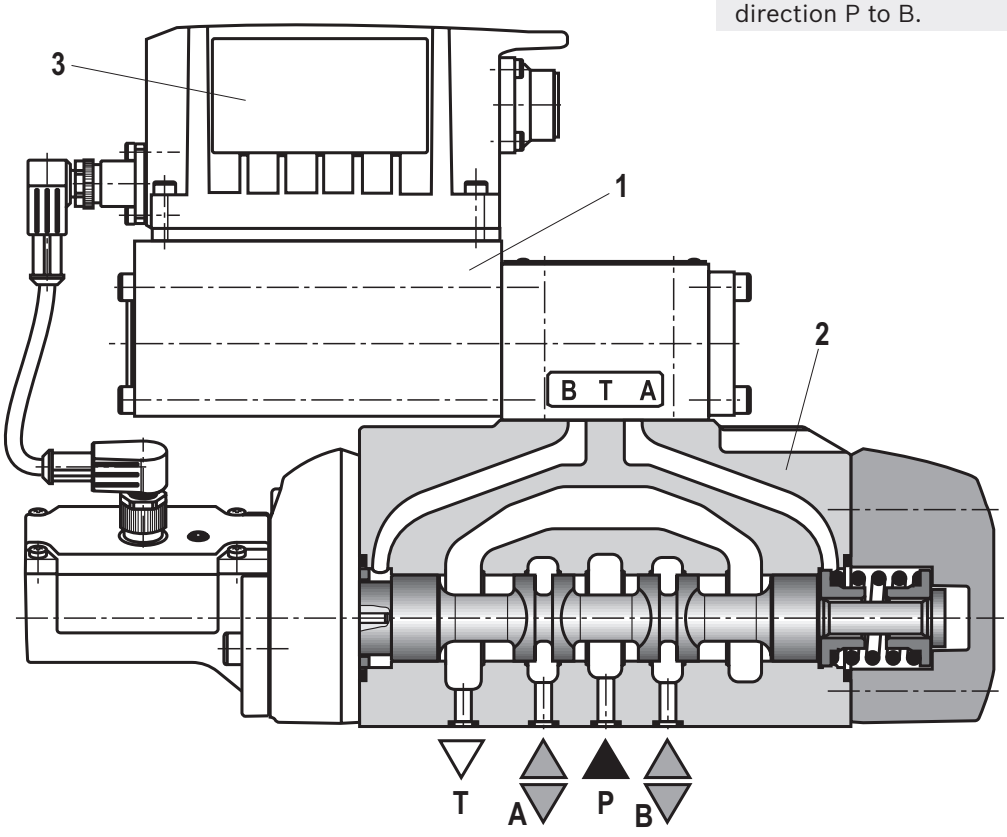

www.belimportsnab.by

www.belimportsnab.by

Pilot oil supply (schematic illustration)

NG10

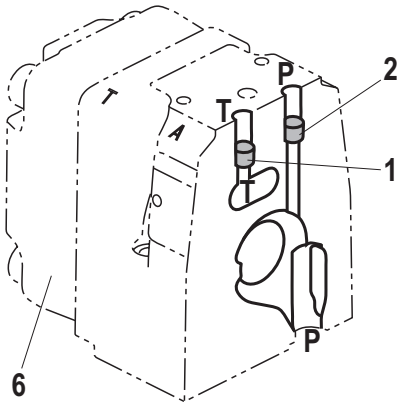

NG16

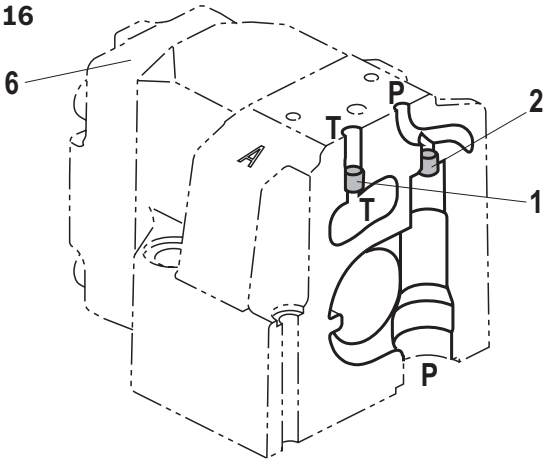

NG25

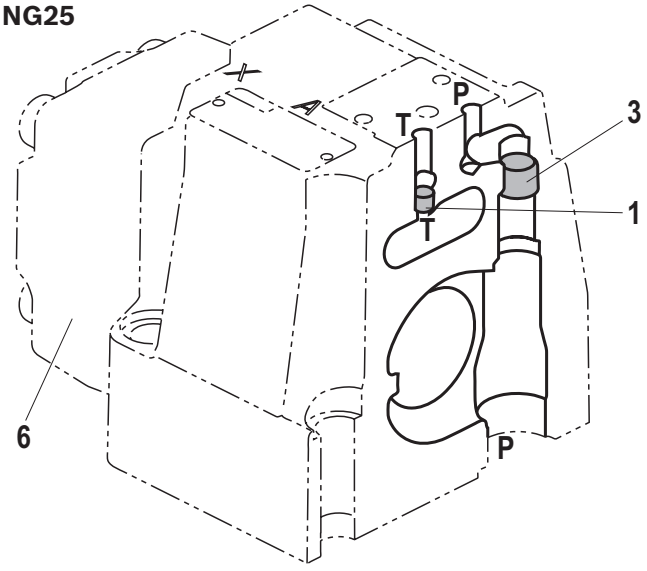

NG27

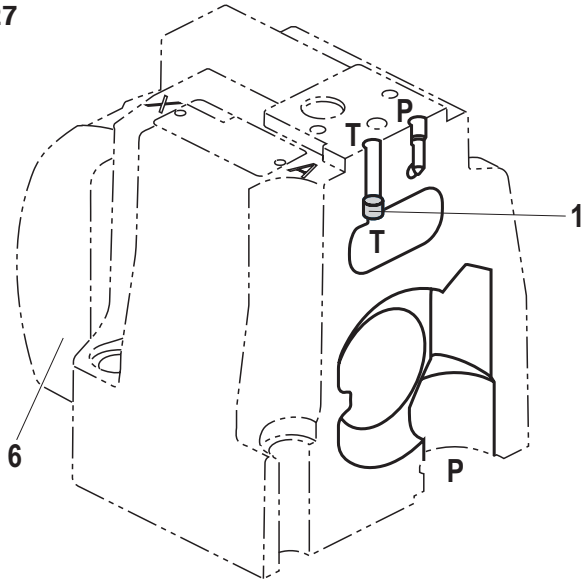

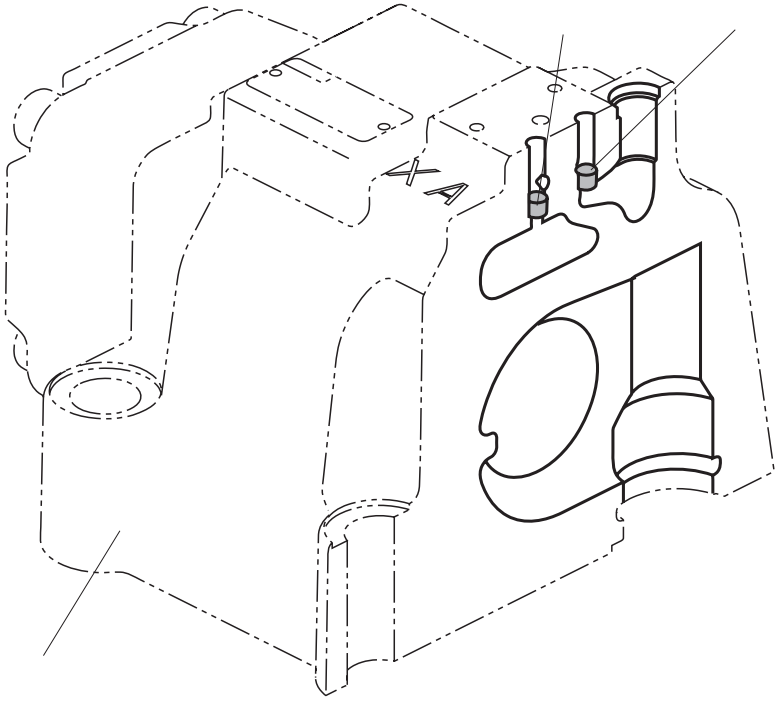

1 Plug screw M6 according to DIN 906, wrench size 3
– pilot oil return

2 Plug screw M6 according to DIN 906, wrench size 3
– pilot oil supply

3 Plug screw M12 x 1.5 according DIN 906, wrench size 6
– pilot oil supply

4 Plug screw 1/16-27 NPTF, wrench size 4
– pilot oil return

5 Plug screw 1/16-27 NPTF, wrench size 4
– pilot oil supply

6 Housing cover main stage (position transducer side)

Pilot oil supply
external: **2, 3, 5** closed
internal: **2, 3, 5** open

Pilot oil return
external: **1, 4** closed
internal: **1, 4** open

www.belimportsnab.by

 www.belimportsnab.by

Pilot oil supply

Version "XY"
External pilot oil supply
External pilot oil return
In this version, the pilot oil is supplied from a separate control circuit (external).
The pilot oil return is not directed into channel T of the main valve, but is separately directed to the tank via port Y (external).

Version "PY"
Internal pilot oil supply
External pilot oil return
With this version, the pilot oil is supplied from channel P of the main valve (internally).
The pilot oil return is not directed into channel T of the main valve, but is separately directed to the tank via port Y (external).
In the subplate, port X is to be closed.

Version "PT"
Internal pilot oil supply
Internal pilot oil return
With this version, the pilot oil is supplied from channel P of the main valve (internally).
The pilot oil is directly returned to channel T of the main valve (internally).
In the subplate, ports X and Y are to be closed.

Version "XT"
External pilot oil supply
Internal pilot oil return
In this version, the pilot oil is supplied from a separate control circuit (external).
The pilot oil is directly returned to channel T of the main valve (internally).
In the subplate, port Y is to be closed.

Technical data
(For applications outside these values, please consult us!)

general						
Size	NG	10	16	25	27	
Installation position		Any				
Ambient temperature range	°C	–20 ... +60				
Maximum storage time	Years	1 (if the storage conditions are observed; refer to the operating instructions 07600-B)				
Vibration resistance ▶ Sine test according to DIN EN 60068-2-6		10 ... 2000 Hz / maximum of 10 g / 10 cycles / 3 axes				
▶ Noise test according to DIN EN 60068-2-64		20 ... 2000 Hz / 10 g_{RMS} / 30 g peak / 30 min. / 3 axes				
▶ Transport shock according to DIN EN 60068-2-27		15 g / 11 ms / 3 axes				
Weight	kg	9	12	19	21	
Maximum relative humidity (no condensation)	%	95				
Maximum solenoid surface temperature	°C	120 (individual operation)				

www.belimportsnab.by

www.belimportsnab.by

Technical data
(For applications outside these values, please consult us!)

hydraulic											
Size		NG	10		16		25		27		
Maximum operating pressure	▶ Port A, B, P										
	– External pilot oil supply	bar	350						270		
	– Pilot oil supply internal	bar	280						270		
	▶ Port X	bar	280						270		
	▶ Ports T, Y	bar	250						210		
Minimum pilot pressure (pilot control valve)		bar	10								
Maximum flow		l/min	300		800		1250		1850		
Rated flow (***Δp*** = 5 bar/control edge) [1]		l/min	60/100		200/250		350/400		430/600		
Pilot oil flow [2]	▶ Symbol E, W	l/min	2.4		3.5		7.5				
	▶ Symbol V, Q3-	l/min	4.5		11.5		22				
Maximum leakage flow (inlet pressure 100 bar)	▶ Symbol E, E1-										
	– Main valve	l/min	0.06		0.13		0.17				
	– Main valve + pilot control valve	l/min	0.14		0.28		0.42				
	▶ Symbol W6-, W8-										
	– Main valve	l/min	0.12		0.26		0.35				
	– Main valve + pilot control valve	l/min	0.2		0.41		0.6				
Maximum zero flow (inlet pressure 100 bar)	▶ Symbol V, V1-										
	– Main valve	l/min	1.7		2.3		2.8		3.3		
	– Main valve + pilot control valve	l/min	1.85		2.6		3.2		3.7		
	▶ Symbol Q3-										
	– Main valve	l/min	0.4		1.6		1.8		2.2		
	– Main valve + pilot control valve	l/min	0.55		1.9		2.2		2.6		
Flow unloading central position Δ***p*** = 5 bar/control edge			A→T	B→T	A→T	B→T	A→T	B→T	A→T	B→T	
	▶ Symbol W6-	l/min	2.8	2.8	4	4	6	6	6	6	
	▶ Symbol W8-	l/min	2.8	1.4	4	2	6	3	6	3	
Hydraulic fluid			See table below								
Viscosity range	▶ recommended	mm^2/s	30 ... 45								
	▶ maximum admissible	mm^2/s	20 ... 380								
Hydraulic fluid temperature range (flown-through)		°C	–20 ... +70								
Maximum admissible degree of contamination of the hydraulic fluid; Cleanliness class according to ISO 4406 (c)			Class 18/16/13 [3]								

Hydraulic fluid		**Classification**	**Suitable sealing materials**	**Standards**	**Data sheet**
Mineral oils		HL, HLP, HLPD, HVLP, HVLPD	NBR, FKM	DIN 51524	90220
Bio-degradable	▶ Insoluble in water	HETG	NBR, FKM	ISO 15380	90221
		HEES	FKM		
	▶ Soluble in water	HEPG	FKM	ISO 15380	
Flame-resistant	▶ Water-free	HFDU, HFDR	FKM	ISO 12922	90222
	▶ Containing water	HFC (Fuchs Hydrotherm 46M, Petrofer Ultra Safe 620)	NBR	ISO 12922	90223

☞ **Important notice on hydraulic fluids:**
- ▶ For more information and data on the use of other hydraulic fluids, please refer to the data sheets above or contact us!
- ▶ There may be limitations regarding the technical valve data (temperature, pressure range, life cycle, maintenance intervals, etc.)!
- ▶ The ignition temperature of the hydraulic fluid used must be 40 K higher than the maximum solenoid surface temperature.
- ▶ **Flame-resistant – containing water**:
  - – Maximum operating pressure of 210 bar
  - – Maximum pressure differential per control edge 175 bar
  - – Pressure pre-loading at the tank port >20% of the pressure differential, otherwise increased cavitation erosion
  - – Life cycle as compared to operation with mineral oil HL, HLP 50 ... 100%
  - – Maximum hydraulic fluid temperature 50 °C

Explanation of the footnotes see page 10.

www.belimportsnab.by

www.belimportsnab.by

Technical data
(For applications outside these parameters, please consult us!)

1) Flow for deviating Δp (valve pressure differential):

$$q_x = q_{V\,nom} \times \sqrt{\frac{\Delta p_x}{5}}$$

2) At port X and Y with stepped input signal from 0 ... 100% (pilot pressure 100 bar)

3) The cleanliness classes specified for the components must be adhered to in hydraulic systems. Effective filtration prevents faults and simultaneously increases the life cycle of the components.
Available filters can be found at www.boschrexroth.com/filter.

static / dynamic							
Size		NG	10	16	25	27	
Hysteresis		%	< 0.1				
Response sensitivity		%	< 0.05				
Range of inversion		%	< 0.08				
Manufacturing tolerance q_{Vmax}		%	≤ 10				
Actuating time for 0 ... 100% at X = 100 bar	▶ Symbol E1, E1-, W6, W8-	ms	40	85	80	80	
Switch-off behavior (after electrical shut-off)	▶ Symbol E1, E1-, W6, W8-		Pilot control valve in "fail-safe" position, main valve moves to overlapped spring-centered central position				
	▶ Symbol V, V1-		Pilot control valve in "fail-safe" position, main valve moves to spring-centered "offset position" (approx. 6%, P→B/A→T)				
	▶ Symbol Q3		Pilot control valve in "fail-safe" position, main valve moves to spring-centered "offset position" (P blocked, A/B to port T open)				
Temperature drift (temperature range 20 °C ... 80 °C)		%/10 °C	Zero shift < 0.25				
Zero compensation			Ex plant ±1%				

electrical, integrated electronics (OBE)		
Relative duty cycle	%	100 (continuous operation)
Protection class according to EN 60529		IP 65 with mounted and locked plug-in connectors
Supply voltage	VDC	24
▶ Terminal A	VDC	min. 19 / max. 36
▶ Terminal B	VDC	0
Maximum admissible residual ripple	Vpp	2.5
Maximum power consumption	VA	40
Fuse protection, external	A_T	2.5 (time-lag)
Input, version"A1"		Differential amplifier, R_i = 100 kΩ
▶ Terminal D (U_E)	VDC	0 ... ±10
▶ Terminal E	VDC	0
Input, version"F1"		Load, R_{sh} = 200 Ω
▶ Terminal D (I_{D-E})	mA	4 ... (12) ... 20
▶ Terminal E (I_{D-E})		Current loop I_{D-E} feedback
Maximum voltage of the differential inputs against 0 V		D → B; E → B (max. 18 V)
Test signal, version "A1"		LVDT
▶ Terminal F (U_{Test})	V	0 ... ±10
▶ Terminal C		Reference 0 V
Test signal, version "F1"		LVDT signal 4 ... (12) ... 20 mA on external load 200 ... 500 Ω maximum
▶ Terminal F (I_{F-C})	mA	4 ... (12) ... 20
▶ Terminal C (I_{F-C})		Current loop I_{F-C} feedback
Functional earth and screening		See page 12 (EMC compliant installation)
Adjustment		Calibrated in the plant, see valve characteristic curves page 13 ... 26
Conformity		CE according to EMC Directive 2014/30/EU tested according to EN 61000-6-2 and EN 61000-6-3

www.belimportsnab.by

www.belimportsnab.by

Block diagram/controller function block

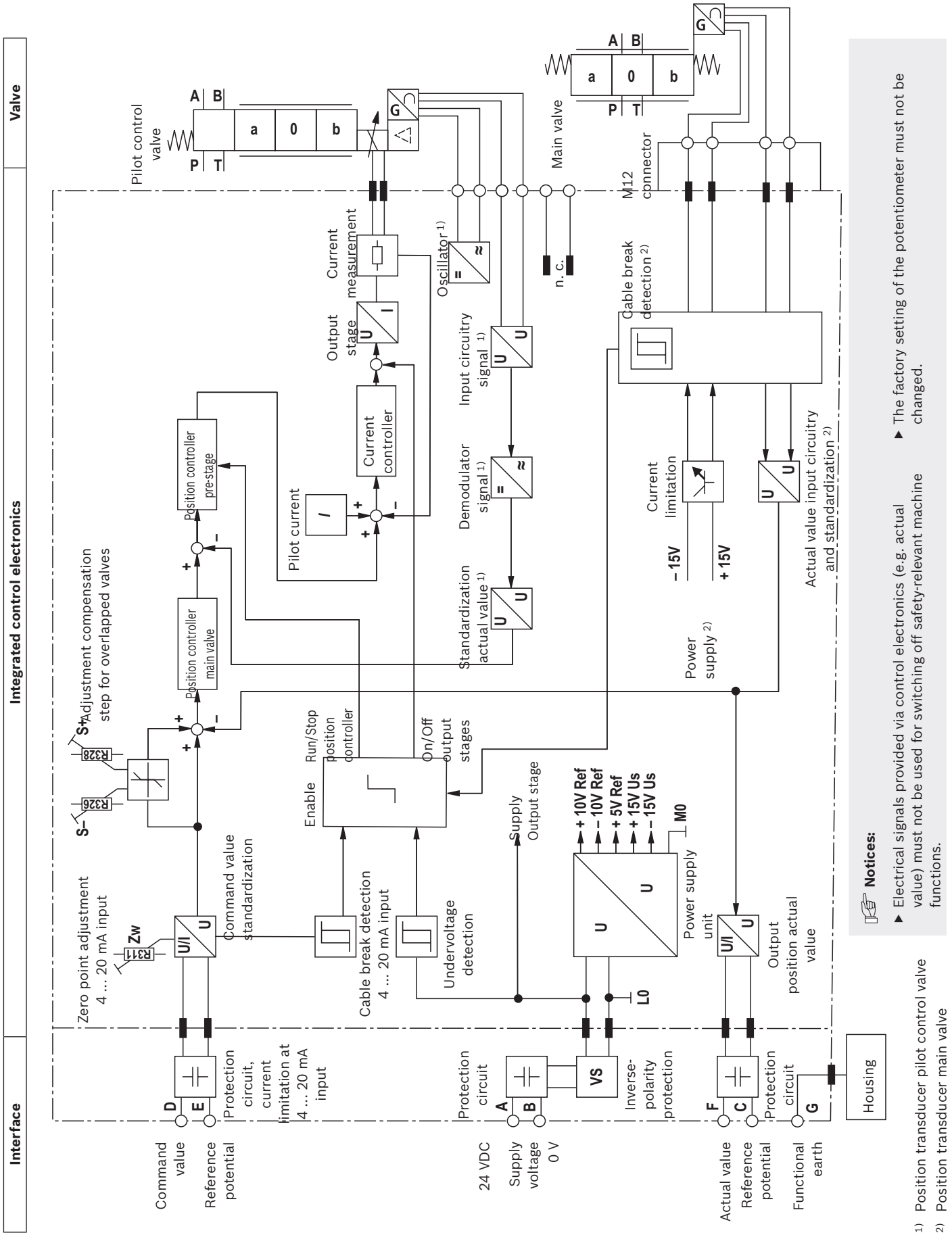

www.belimportsnab.by

www.belimportsnab.by

Electrical connections and assignment

Connector pin assignment

Pin	Signal	Assignment interface A1	Assignment interface F1
A	Supply voltage	24 VDC	
B		0 V	
C	Reference potential actual value	Reference potential actual value - pin F	
D	Differential amplifier input	Command value ±10 V	Command value 4 ... (12) ... 20 mA
E		Reference potential command value - pin D	
F	Measuring output (actual value)	Actual value ±10 V	Actual value 4 ... (12) ... 20 mA
PE		Functional earth (directly connected to the valve housing)	

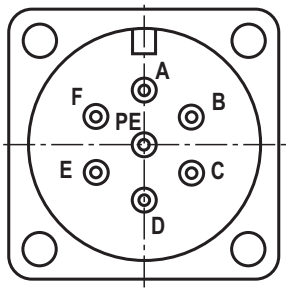

Command value:	▶ Positive command value (0 ... 10 V or 12 ... 20 mA on D and reference potential on E cause flow from P → A and B → T.
	▶ Negative command value (0 ... –10 V or 12 ... 4 mA) on D and reference potential on E cause flow from P → B and A → T.
Connection cable (recommendation):	▶ Up to 20 m cable length type LiYCY 7 x 0.75 mm²
	▶ Up to 40 m cable length type LiYCY 7 x 1.0 mm²
	▶ EMC compliant installation: – Apply screening to both line ends on functional earth (PE) – Use metal mating connector (see page 31) ▶ Alternatively up to 30 m cable length admissible – Apply supply-side screening on functional earth (PE) – Plastic mating connector (see page 31) can be used

☞

www.belimportsnab.by

www.belimportsnab.by

Characteristic curves: Flow characteristic "L"
(valid for HLP46, ϑ_{Oil} = 40 ±5 °C; Δp = 5 bar/control edge)

Flow/signal function

Symbol V, V1-

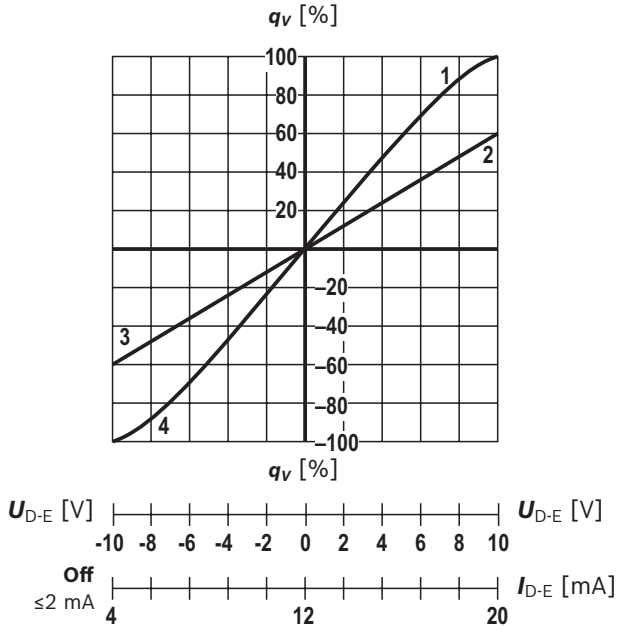

1 P–A; B–T (1:1)
2 B–T (2:1)
3 P–B (2:1)
4 P–B; A–T (1:1)

Symbol E1, E1-, W6, W8-

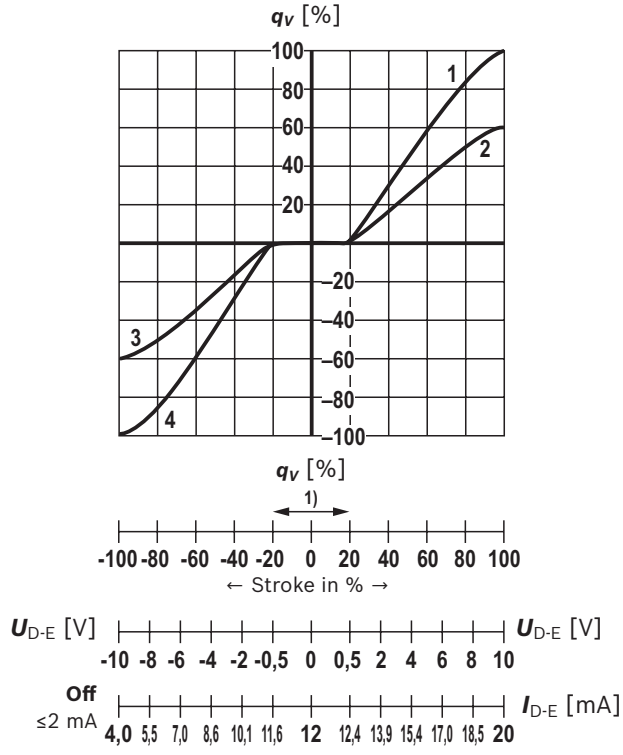

1) Step compensation

www.belimportsnab.by

www.belimportsnab.by

Characteristic curves: Flow characteristic "P"
(valid for HLP46, ϑ_{Oil} = 40 ±5 °C; Δp = 5 bar/control edge)

Flow/signal function

Symbol V, V1-

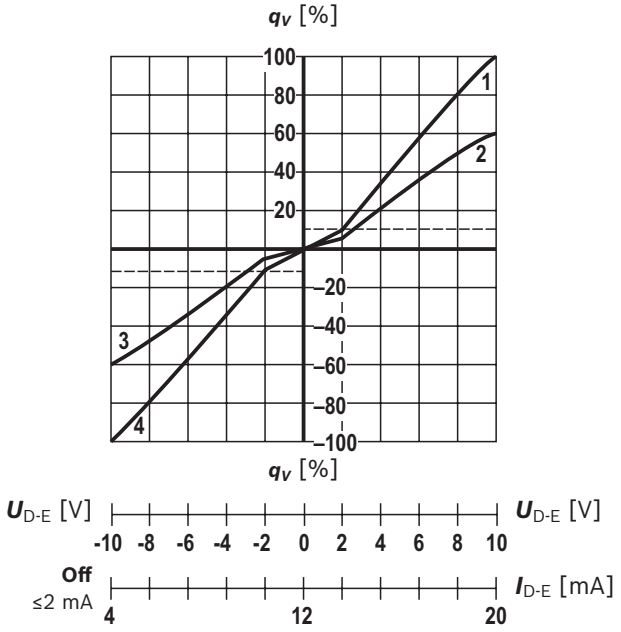

1 P–A; B–T (1:1)
2 B–T (2:1)
3 P–B (2:1)
4 P–B; A–T (1:1)
––– 10 % q_V

Symbol E1, E1-, W6, W8-

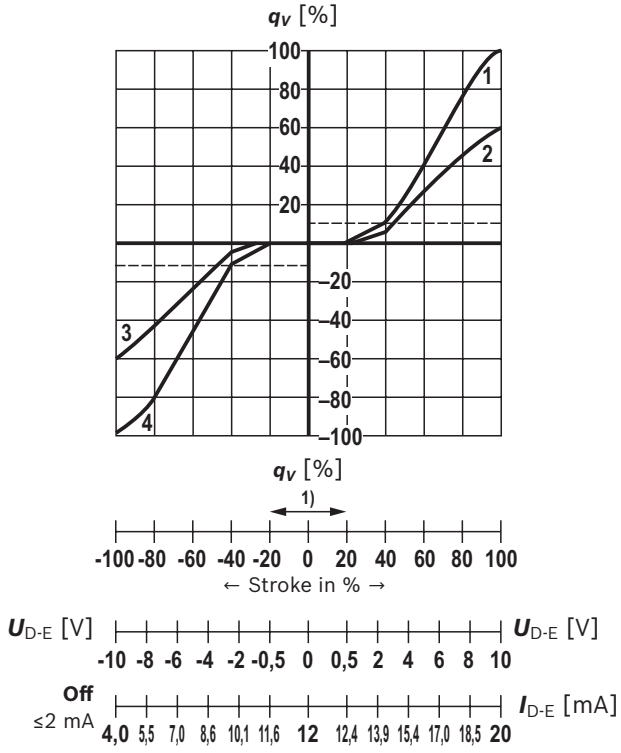

1) Step compensation

www.belimportsnab.by

www.belimportsnab.by

Characteristic curves: Flow characteristic "M"
(valid for HLP46, ϑ_{Oil} = 40 ±5 °C; Δp = 5 bar/control edge)

Flow/signal function

Symbol Q3, version "100"

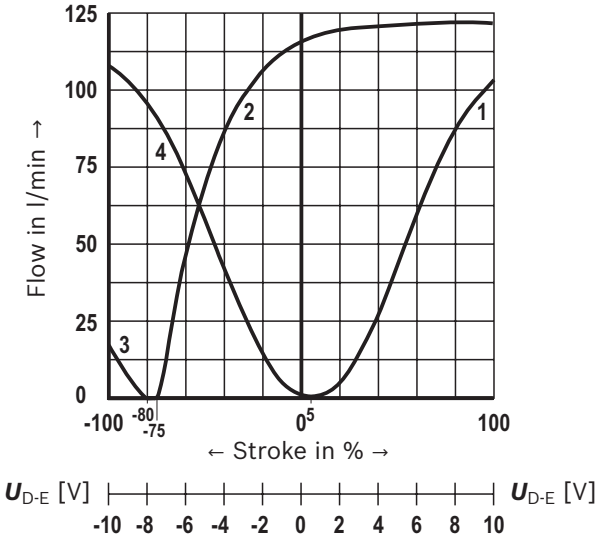

Symbol Q3, version "250"

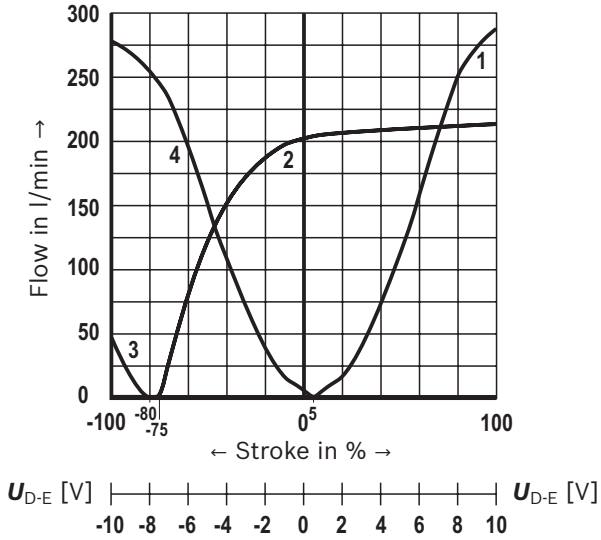

Symbol Q3, version "400"

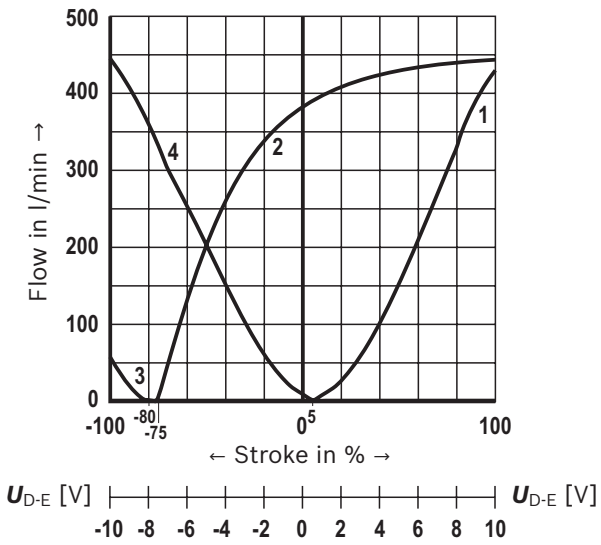

Symbol Q3, version "600"

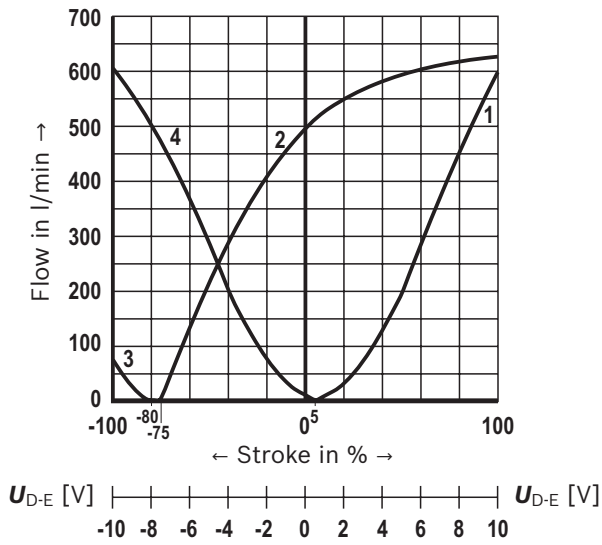

1 P–A
2 B–T
3 P–B
4 A–T

www.belimportsnab.by

 www.belimportsnab.by

Characteristic curves: Flow characteristic "M"
(valid for HLP46, ϑ_{Oil} = 40 ±5 °C; Δp = 5 bar/control edge)

Flow/signal function

Symbol Q3, version "1500"

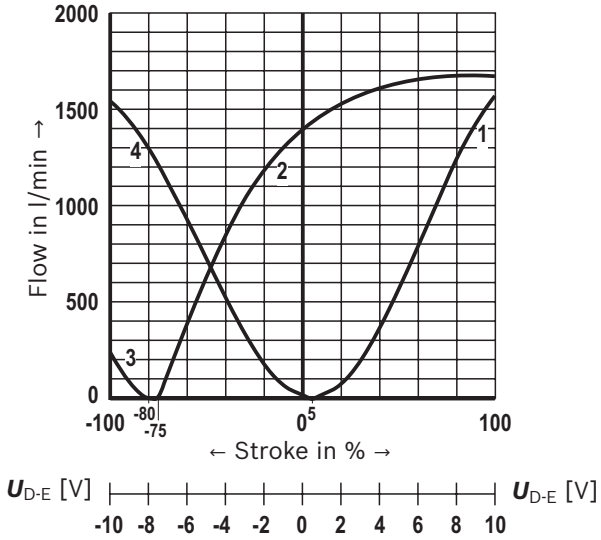

1 P–A
2 B–T
3 P–B
4 A–T

Characteristic curves
(measured with HLP46, ϑ_{Oil} = 40 ±5 °C)

Pressure amplification

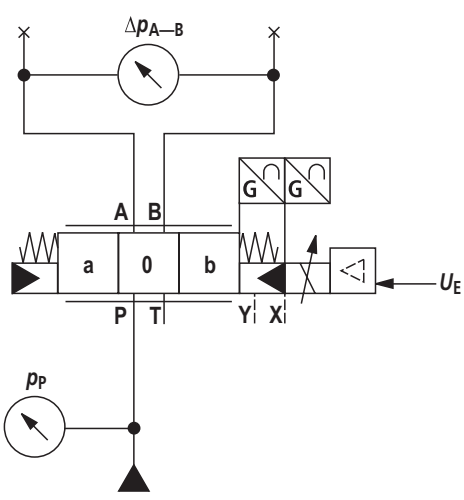

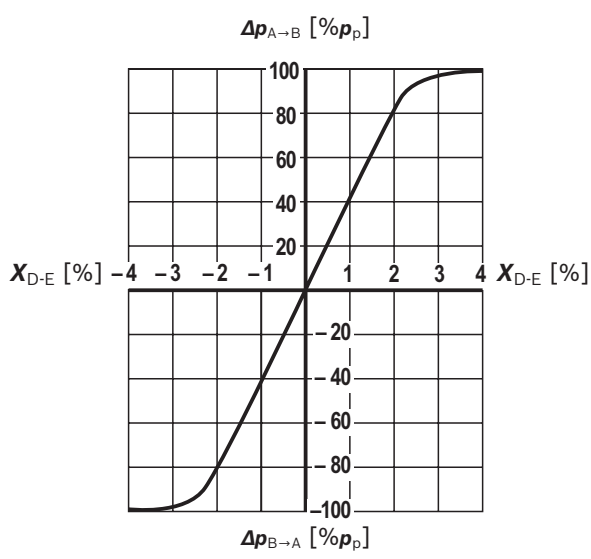

www.belimportsnab.by

www.belimportsnab.by

Characteristic curves: Size 10
(valid for HLP46, ϑ_{Oil} = 40 ±5 °C)

Flow/load function with maximum valve opening (with maximum valve opening; tolerance ±10%)

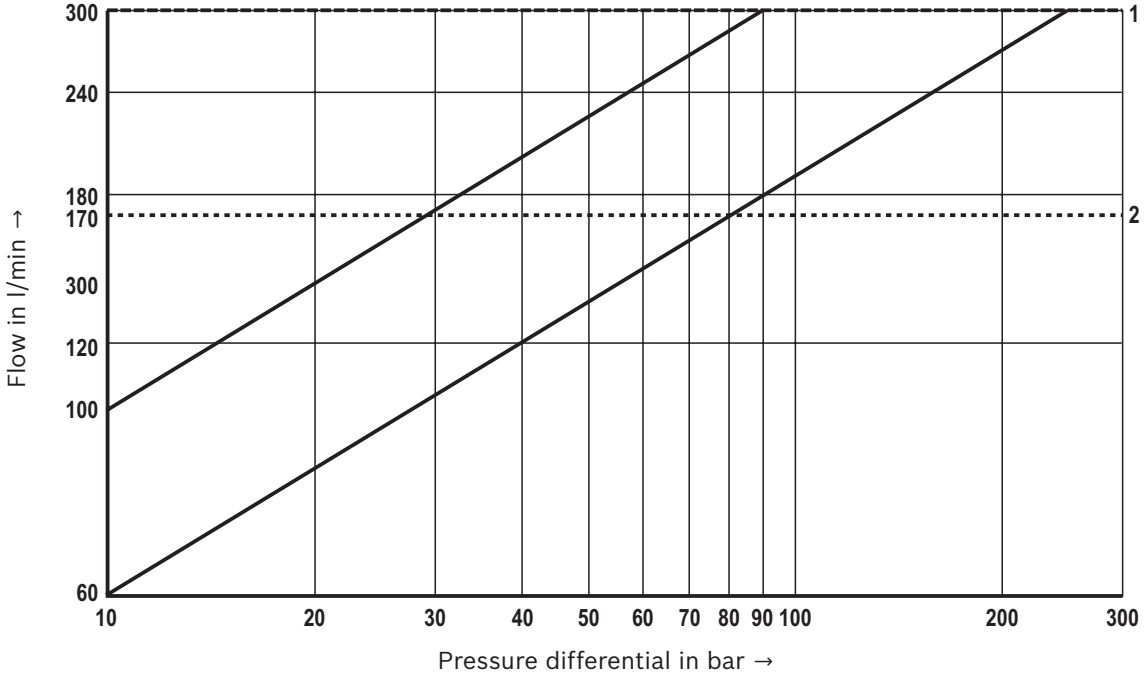

1 Maximum admissible flow

2 Recommended flow (flow velocity 30 m/s)

www.belimportsnab.by

www.belimportsnab.by

Characteristic curves: Size 16
(valid for HLP46, ϑ_{Oil} = 40 ±5 °C)

Flow/load function with maximum valve opening (with maximum valve opening; tolerance ±10%)

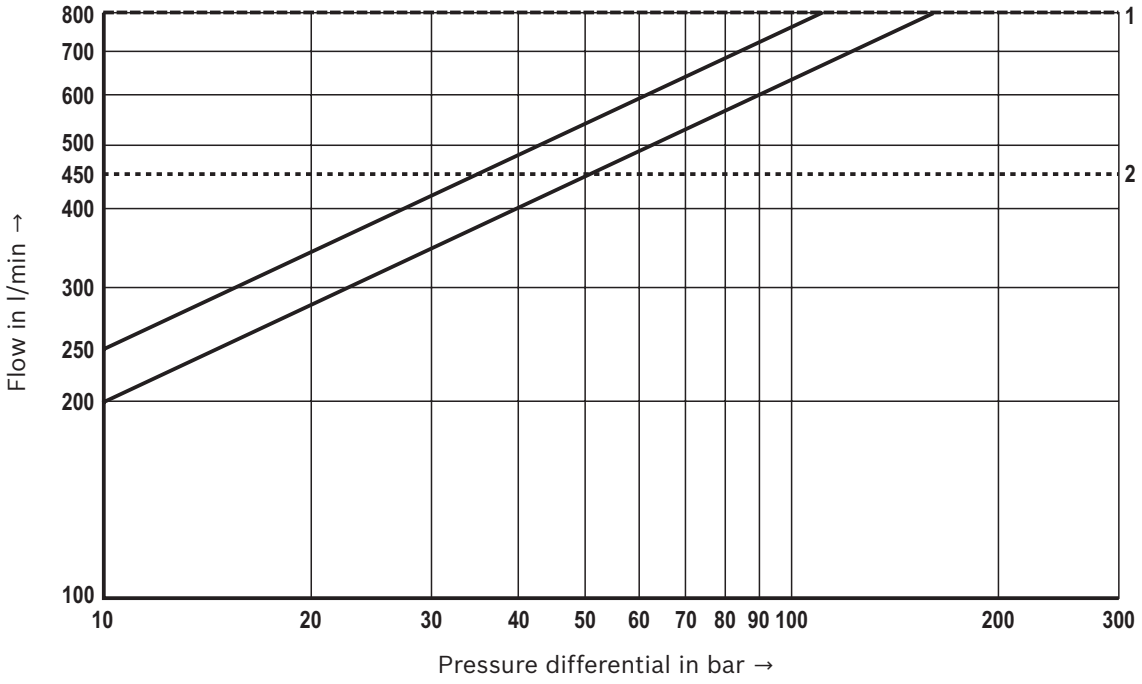

1 Maximum admissible flow

2 Recommended flow (flow velocity 30 m/s)

www.belimportsnab.by

www.belimportsnab.by

Characteristic curves: Size 25
(valid for HLP46, ϑ_{Oil} = 40 ±5 °C)

Flow/load function with maximum valve opening (with maximum valve opening; tolerance ±10%)

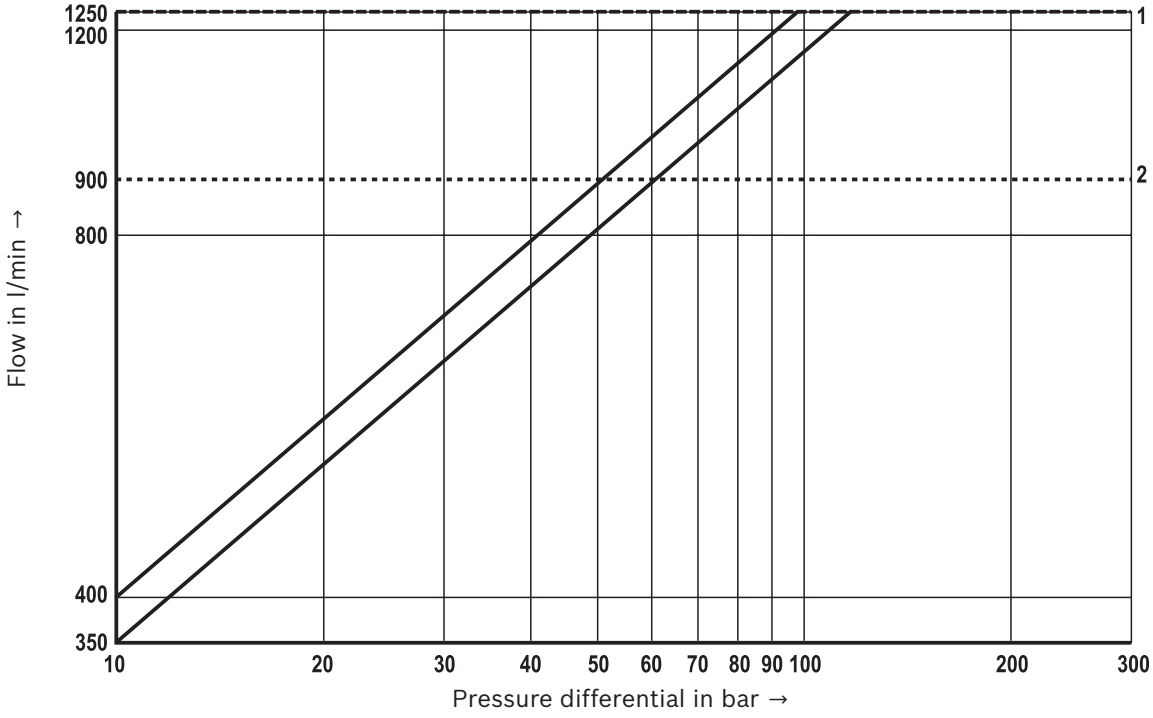

1 Maximum admissible flow
2 Recommended flow (flow velocity 30 m/s)

www.belimportsnab.by

www.belimportsnab.by

Characteristic curves: Size 27
(valid for HLP46, ϑ_{Oil} = 40 ±5 °C)

Flow/load function with maximum valve opening (with maximum valve opening; tolerance ±10%)

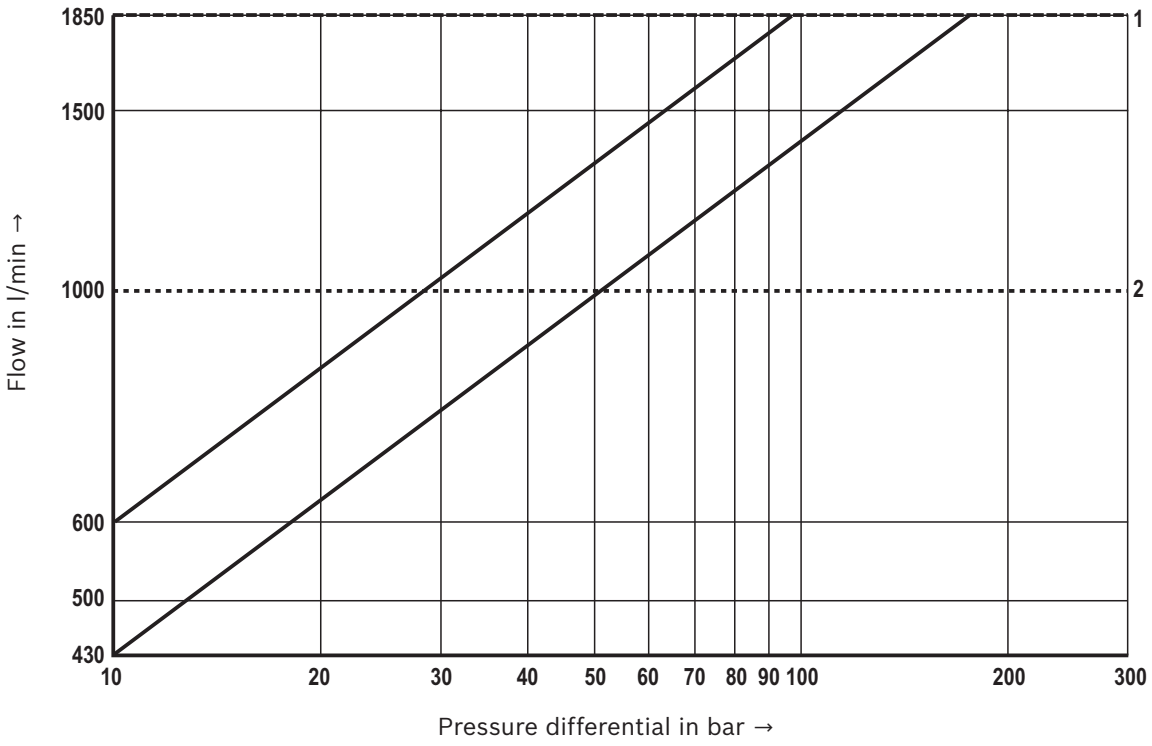

1 Maximum admissible flow
2 Recommended flow (flow velocity 30 m/s)

www.belimportsnab.by

www.belimportsnab.by

Dimensions: Size 10
(dimensions in mm)

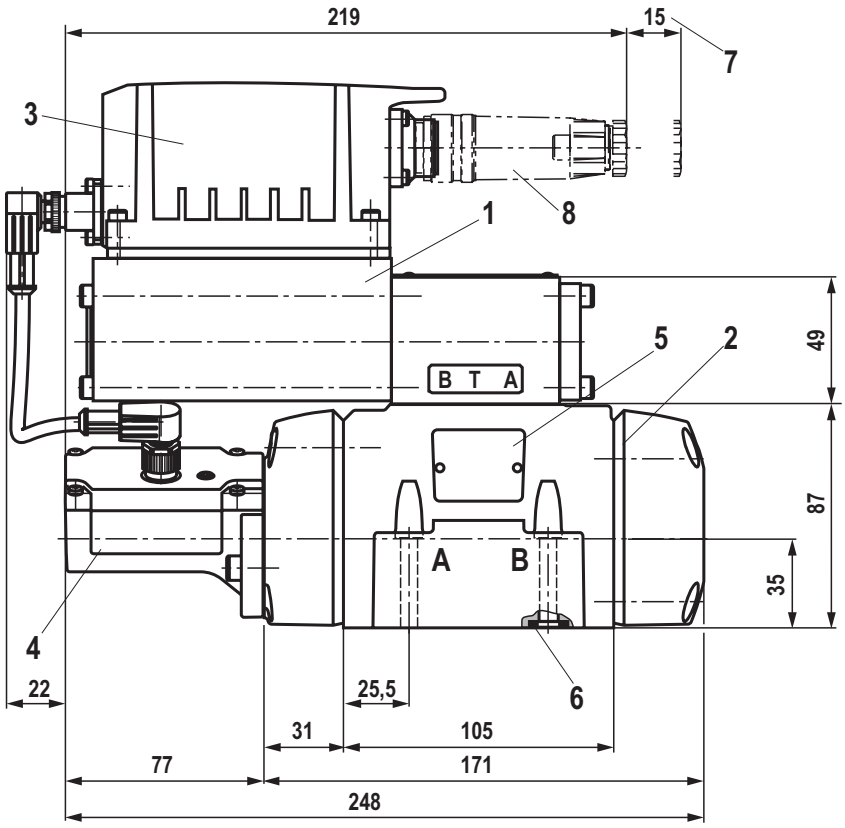

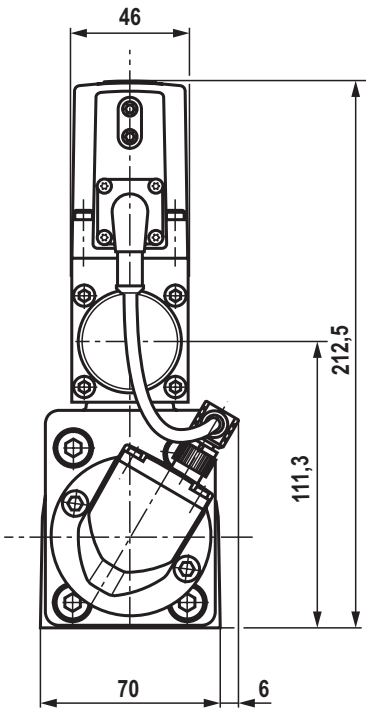

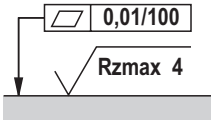

Required surface quality of the valve contact surface

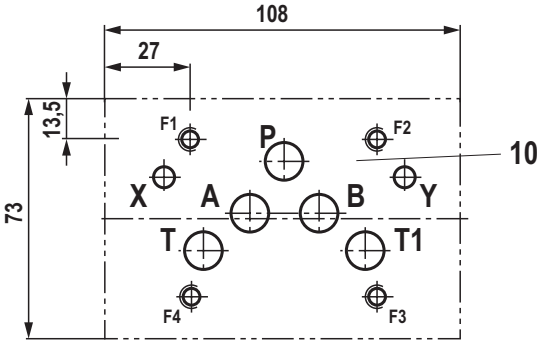

1 Pilot control valve
2 Main valve
3 Integrated electronics (OBE)
4 Inductive position transducer (main valve)
5 Name plate
6 Identical seal rings for ports P, A, B, T; Identical seal rings for ports X, Y
7 Space required for removing the mating connector
8 Mating connectors, separate order, see page 31 and data sheet 08006.
9 Locking pin
10 Machined valve contact surface, porting pattern according to ISO 4401-05-05-0-05

For valve mounting screws and **subplates,** see page 31.

☞ **Notices:**
The dimensions are nominal dimensions which are subject to tolerances.

www.belimportsnab.by

www.belimportsnab.by

Dimensions: Size 16
(dimensions in mm)

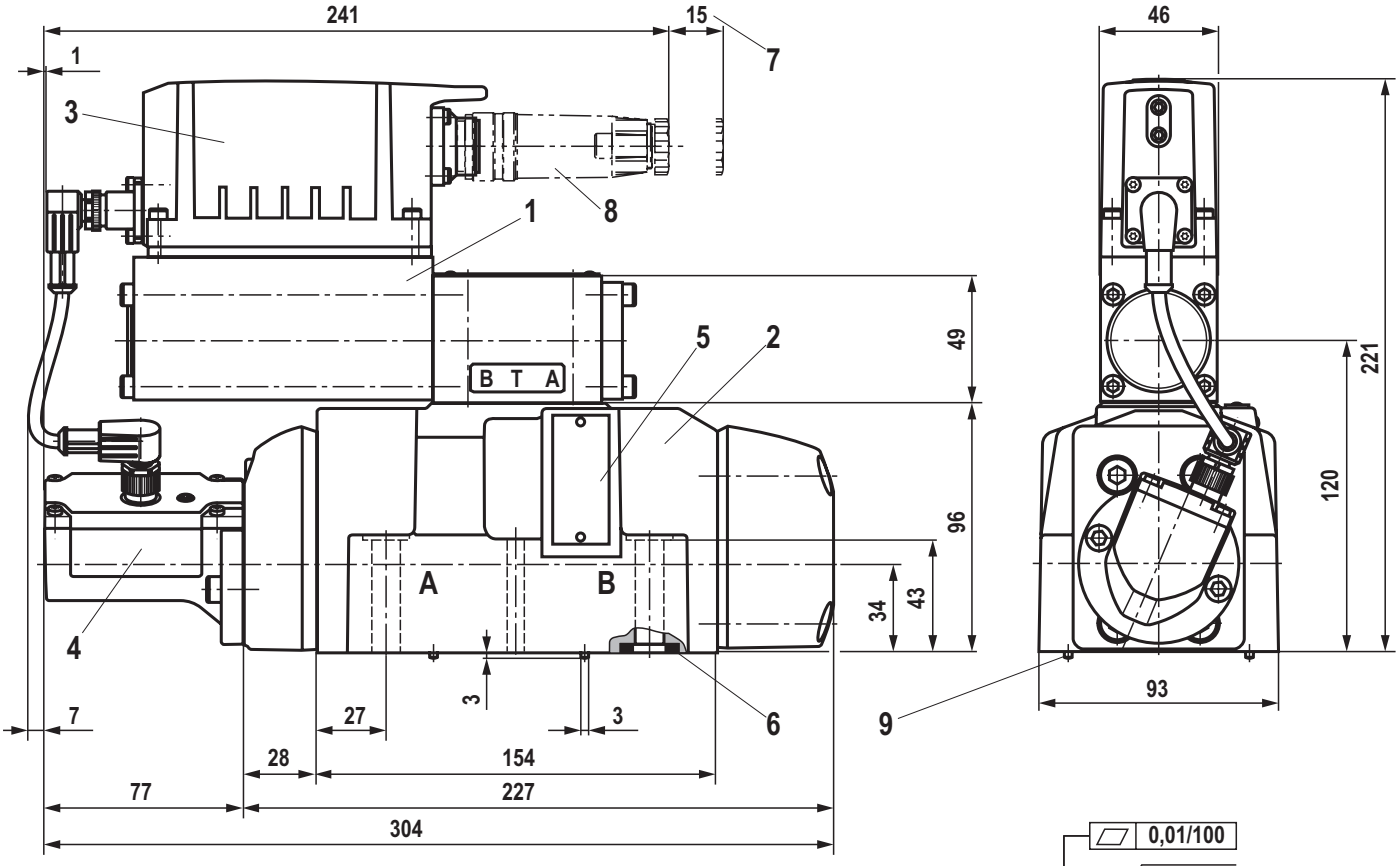

Required surface quality of the valve contact surface

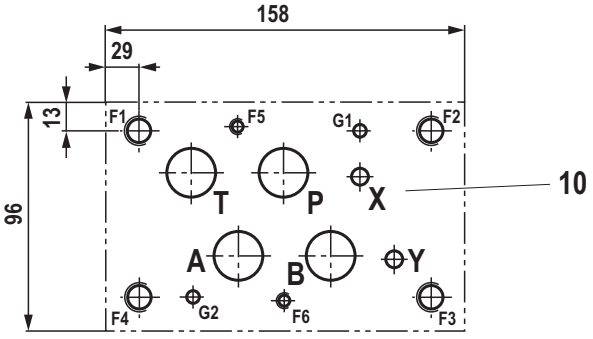

1 Pilot control valve
2 Main valve
3 Integrated electronics (OBE)
4 Inductive position transducer (main valve)
5 Name plate
6 Identical seal rings for ports P, A, B, T; Identical seal rings for ports X, Y
7 Space required for removing the mating connector
8 Mating connectors, separate order, see page 31 and data sheet 08006.
9 Locking pin
10 Machined valve contact surface, porting pattern according to ISO 4401-07-07-0-05 Deviating from the standard: Ports P, A, B, T – Ø20 mm

For valve mounting screws and **subplates,** see page 31.

☞ **Notices:**
The dimensions are nominal dimensions which are subject to tolerances.

www.belimportsnab.by

Dimensions: Size 25 and 27
(dimensions in mm)

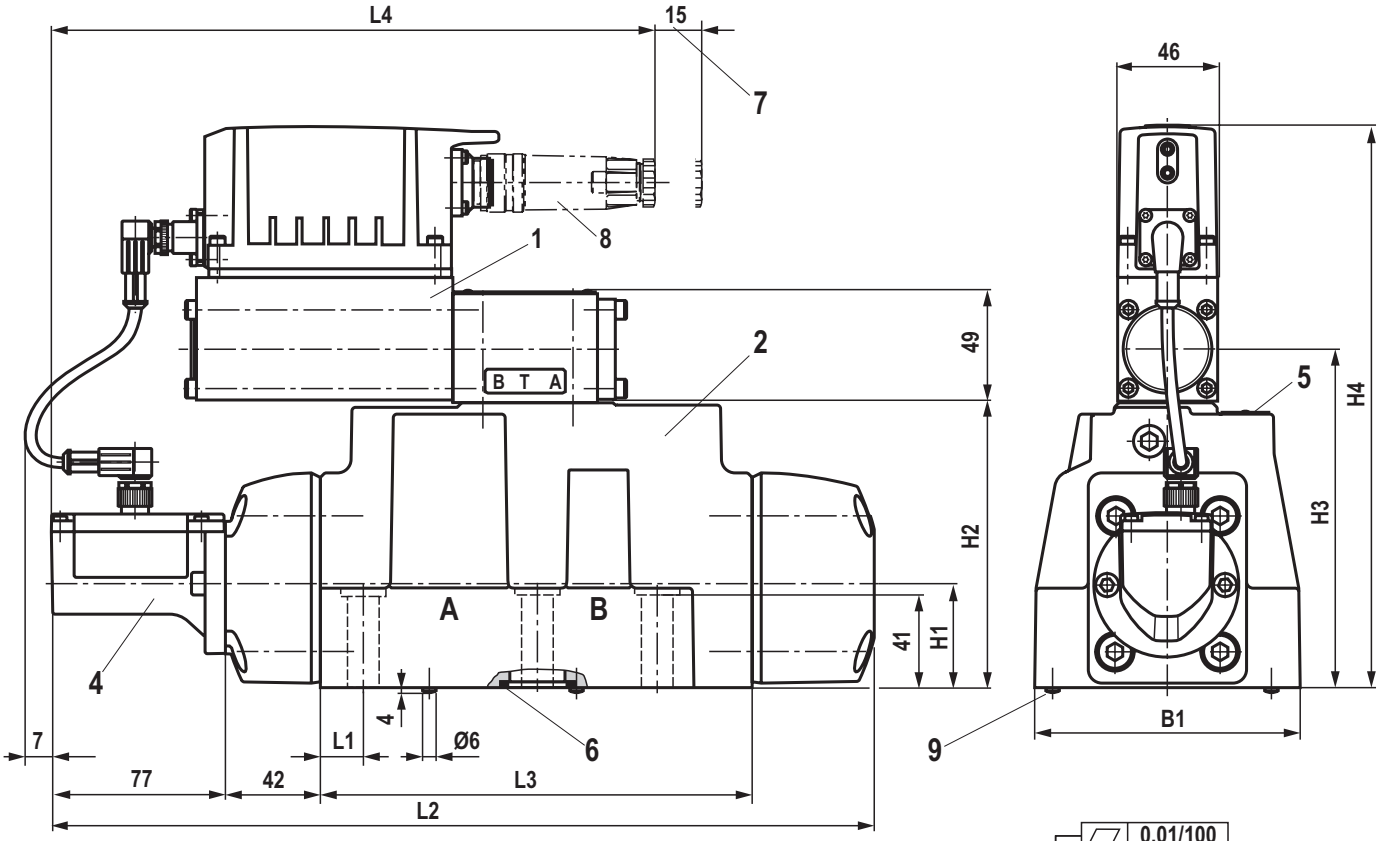

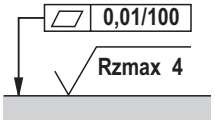

Required surface quality of the valve contact surface

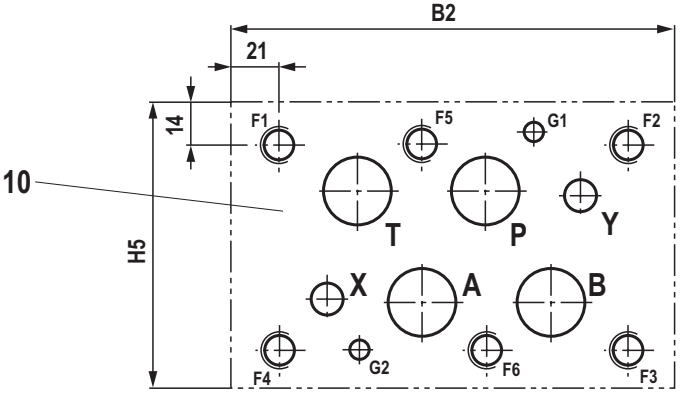

NG	L1	L2	L3	L4	H1	H2	H3	H4	H5	B1	B2
25	19	364	191	274	46	126	150	251	120	118	195
27	20.5	371	198	277	50	140	164	265	124	120	200

For valve mounting screws and **subplates,** see page 31.

1 Pilot control valve
2 Main valve
3 Integrated electronics (OBE)
4 Inductive position transducer (main valve)
5 Name plate
6 Identical seal rings for ports P, A, B, T; Identical seal rings for ports X, Y
7 Space required for removing the mating connector
8 Mating connectors, separate order, see page 31 and data sheet 08006.
9 Locking pin
10 Machined valve contact surface, porting pattern according to ISO 4401-08-08-0-05
Deviating from the standard:
▶ NG27: Ports P, A, B, T – Ø32 mm

☞ **Notices:**
The dimensions are nominal dimensions which are subject to tolerances.

www.belimportsnab.by

Dimensions

Valve mounting screws (separate order)

Size	Quantity	Hexagon socket head cap screws	Material number
10	4	**ISO 4762 - M6 x 45 - 10.9-CM-Fe-ZnNi-5-Cn-T0-H-B** tightening torque M_A = 13.5 Nm ±10%	**R913043777**
	or		
	4	**ISO 4762 - M6 x 45 - 10.9** tightening torque M_A = 15.5 Nm ±10%	Not included in the Rexroth delivery range
16	2	**ISO 4762 - M6 x 60 - 10.9-CM-Fe-ZnNi-5-Cn-T0-H-B** tightening torque M_A = 12.2 Nm ±10%	**R913043410**
	4	**ISO 4762 - M10 x 60 - 10.9-flZn/nc/480h/C** tightening torque M_A = 58 Nm ±20%	**R913014770**
	or		
	2	**ISO 4762 - M6 x 60 - 10.9** tightening torque M_A = 15.5 Nm ±10%	Not included in the Rexroth delivery range
	4	**ISO 4762 - M10 x 60 - 10.9** tightening torque M_A = 75 Nm ±20%	
25, 27	6	**ISO 4762 - M12 x 60 - 10.9-flZn/nc/480h/C** tightening torque M_A = 100 Nm ±20%	**R913015613**
	or		
	6	**ISO 4762 - M12 x 60** tightening torque M_A = 130 Nm ±20%	Not included in the Rexroth delivery range

☞ **Notice:**

- The tightening torque of the hexagon socket head cap screws refers to the maximum operating pressure.
- **When replacing component series 3X with 4X, only the valve mounting screws listed here may be used. Prior to assembly, check the existing mounting bore on the block for sufficient screw-in depth.**

www.belimportsnab.by