БЕЛИМПОРТСНАБ

2-way high-response flow valve

Type 2WRCE...2X

NG 32~50
Up to 420 bar
Up to 4000 L/min

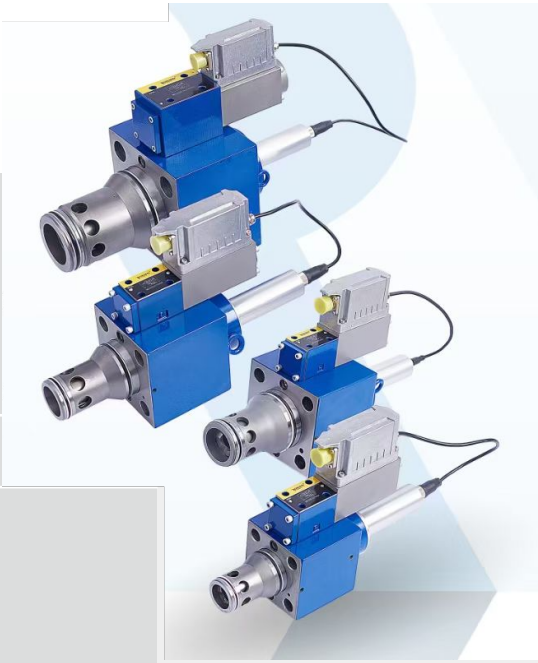

Contents

Ordering code	02-03
Symbols: 2WRCE	04
Function and configuration: 2WRCE	05
Technical data: 2WRCE	08
Integrated electronics	10-11
Characteristic curves	12-13
Unit dimensions	14-15
Installation dimensions according to DIN ISO 7368	16

Features

- Pilot operated 2-way high-response valve in block installation design
- Suitable for closed-loop controlling of position, pressure, force and velocity
- Pilot control valve (pilot): Directly actuated controlled directional valve, with control spool and sleeve in servo quality
- Main stage: closed-loop position controlled
- Integrated open and closed-loop control electronics (OBE)
- Typical applications:
  - Plastic injection machines
  - Die-casting machines
  - Ceramics machines

Ordering code

2	WRCE		S			2X /	P–	G24	K31/		/	Q	*

2/2 directional valve = 2

Electrically operated high-response valve for block installation with integrated electronics (OBE) = WRCE

Size 32 = 32
Size 40 = 40
Size 50 = 50

Seat piston = S

Rated flow in l/min at 5 bar valve pressure drop
Size 32: 800 l/min linear only ...S800L... = 800
600 l/min with fine control range only ...S600R... = 600
Size 40: 1200 l/min linear only ...S1200L... = 1200
850 l/min with fine control range only ...S850R... = 850
Size 50: 2000 l/min linear only ...S2000L... = 2000
1400 l/min with fine control range only ...S1400R... = 1400

Characteristic curve form
Linear = L

Series 20 to 29 = 2X
(20 to 29: Unchanged installation and connection dimensions)

Pilot control valve (pilot)
Servo performance proportional valve = P

Supply voltage 24 VDC = G24

Electrical connection
Without mating connector with connector according to DIN EN 175201-804 = K31
With mating connector with connector according to DIN EN 175201-804 = Z31

Electronics interfaces
Command value 0...+10 V, actual value +0.5...+10 V = A1
Command value 4...20 mA = F1

Seal material
FKM seals = V
NBR seals = No code

When applying pilot pressure, 2WRCE closes actively = No code
When applying pilot pressure, 2WRCE opens actively = L

Without band enable = No code
Band enable = Q

Symbols: 2WRCE

Simplified:

2WRCE..-2X/P...

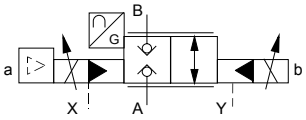

2WRCE..-2X/P...L...

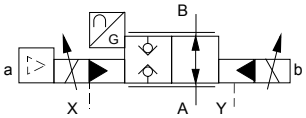

Detailed:

2WRCE..-2X/P...

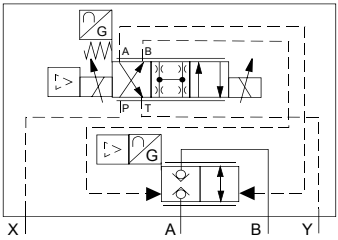

2WRCE..-2X/P...L...

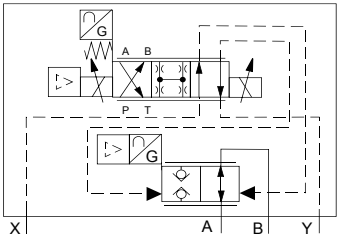

Function and configuration 2WRCE

Valves of type 2WRCE...-2X/P... are 2-stage high-response valves.
They control the quantity and direction of a flow and are mainly used in control loops.

Set-up:
They consist of the following assemblies:
–The pilot control valve (1) as 1-stage proportional valve (pilot), with a solenoid as electro-mechanical converters and a piston that is connected to the integrated pilot electronics via electrical feedback (6.2).
–The second stage (2) for flow control.
–An inductive position transducer (3) the core (4) of which is attached to the piston (5) of the second stage.
–Integrated LVDT electronics(6.1).

Type 2WRCE40...-2X/P...

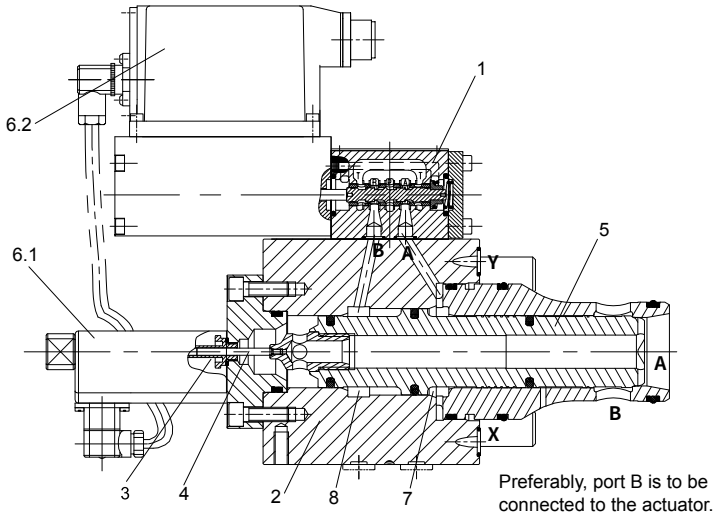

Function
The integrated electronics (OBE) compares command and actual values and the solenoids of the pilot control valve are actuated with a proportional current according to the control deviation.
The pilot control valve takes a proportionally controlled position and controls the flow in and out of the control chambers A (7) and B (8) that actuate the main spool (5) through the closed valve control loop up to 0 control deviation.
This means that the stroke of the main spool is regulated proportionally to the command value. It must be noted that the flow also depends on the valve pressure drop.

Technical data Type 2WRCE

General					
Sizes			32	40	50
Weight		kg	11.2	17.3	24.6
Weight with shut-off valve ...../...WK or .../...WL...		kg	12.5	18.6	25.9
Size of the pilot control valve (pilot)		Size	6	6	6
Installation position			Any, preferably horizontal		
Storage temperature range		°C	–20 to +80		
Ambient temperature range		°C	–20 to +50		
Hydraulic (measured with HLP32, ϑ_{oil}=40°C ±5°C)					
Maximum operating pressures	– Main stage ports A, B	bar	350 for NG32~40,420 for NG50		
	– Pilot control valve port X	bar	315		
	– Pilot control valve port Y	bar	210		
Rated flow at Δp = 5 bar	– Design ...S...L (linear)	L/min	800	1200	2000
	– Design ...S...R (linear with progressive fine control range)	L/min	600	850	1400
Nominal flow of pilot valve at Δp=70 bar		L/min	12	40	40
Leakage of pilot valve at P = 100 bar		L/min	0.3	0.7	0.7
Hydraulic fluid			Mineral oil (HL,HLP) to DIN 51524		
Hydraulic fluid temperature range		°C	–20 to +80; preferably +40 to +50		
Viscosity range		mm^2/s	20 to 380; preferably 30 to 45		
Maximum admissible degree of contamination of the hydraulic fluid, cleanliness class according to ISO 4406 (c)			Class 20/18/15		
Hysteresis		%	⩽ 0.2		
Range of inversion		%	⩽ 0.1		
Response sensitivity		%	⩽ 0.1		
Response time 0 ~ 100% step signal		ms	⩽ 20		

Electric					
Voltage type			Direct voltage		
Type of signal			Analog		
Opening point calibration		%	⩽ 1		
Zero shift upon change of:	– Hydraulic fluid temperature	%/10 K	⩽ 0.3	⩽ 0.3	⩽ 0.3
	– Pilot pressure in X	%/100 bar	⩽ 0.7	⩽ 0.7	⩽ 0.7
	– Return flow pressure in Y	%/bar	⩽ 0.3	⩽ 0.3	⩽ 0.3
Protection class of the valve according to EN60529			IP65 with mating connector mounted and locked		

Nominal command value range for 2WRC:
0 to +10 V ≙ 0 to 100%
In the command value range of 0 to 0.5 V, the actual value remains constant at 0.5 V.
In case of a slow command value modification from 0.5 V to +10 V, the actual value follows the command value within ±0.15 V.

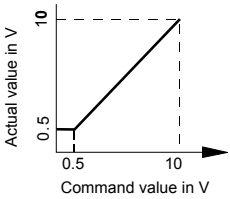

Integrated electronics

Block diagram/Pinout
Version A1: U_{D-E} 0...±10V

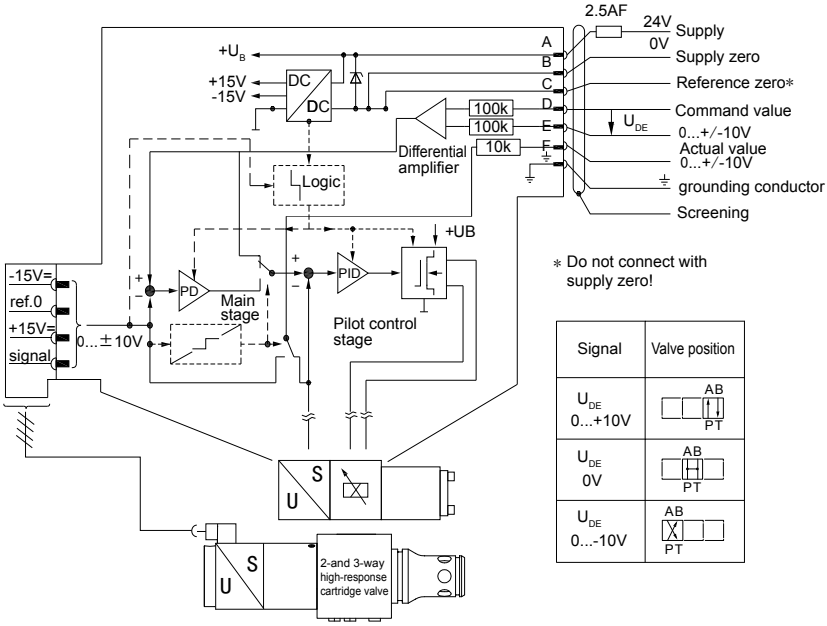

* Do not connect with supply zero!

Signal	Valve position
U_{DE} 0...+10V	AB PT
U_{DE} 0V	AB PT
U_{DE} 0...-10V	AB PT

Pin assignment 6P+PE
Version A1: U_{D-E} 0...±10V

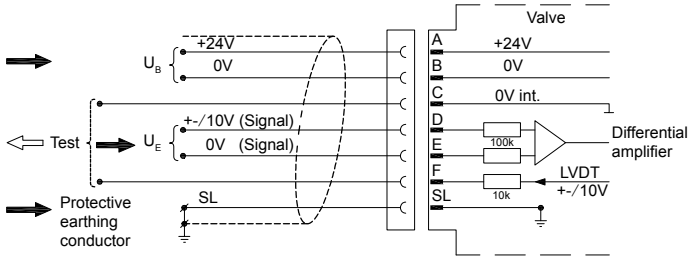

Integrated electronics

Block diagram / Pinout
Version F1: I_{D-E} 4...20mA

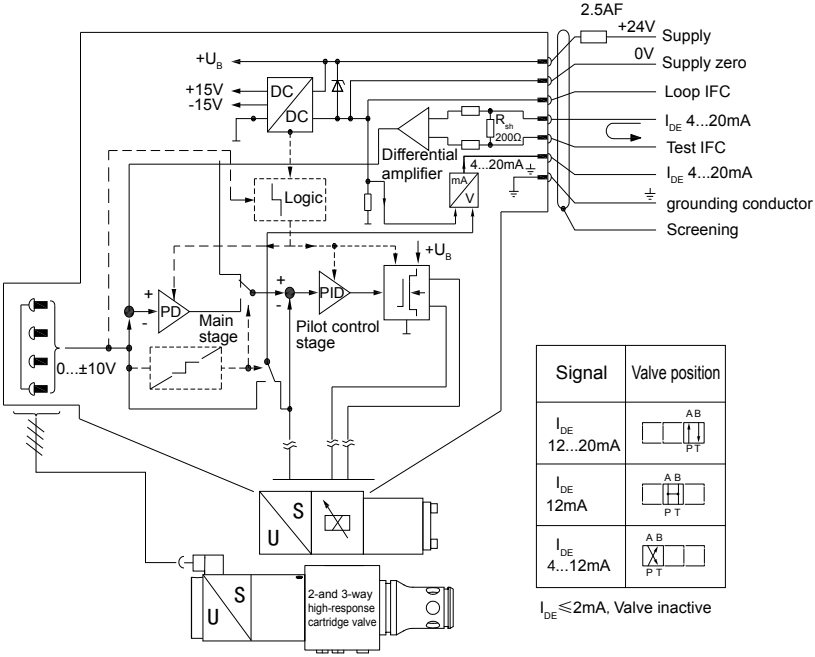

Signal	Valve position
I_{DE} 12...20mA	A B P T
I_{DE} 12mA	A B P T
I_{DE} 4...12mA	A B P T

$I_{DE} \leqslant 2mA$, Valve inactive

Pin assignment 6P+PE
Version F1: I_{D-E} 4...20mA

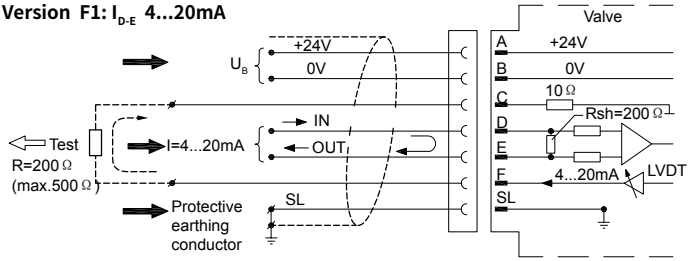

06

Characteristic curves (measured with HLP46, ϑ_{oil}=50°C , P=100bar)

Type: 2WRCE32S800L-2X/P...

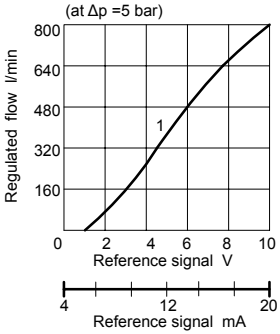

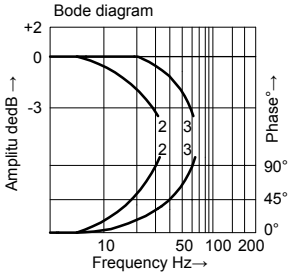

1= Ratedflow line
2= Command value: 10% ⟷ 90%
3= Command value: 50% ± 5%

Type: 2WRCE40S1200L-2X/P...

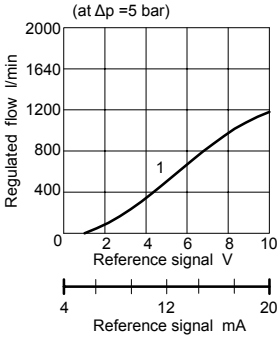

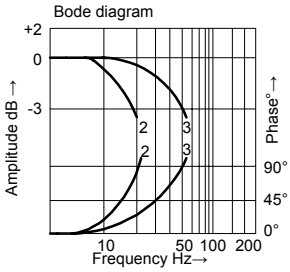

1= Ratedflow line
2= Command value: 10% ⟷ 90%
3= Command value: 50% ± 5%

Type: 2WRCE50S2000L-2X/P...

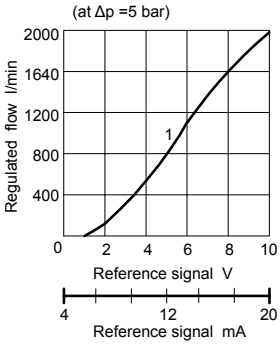

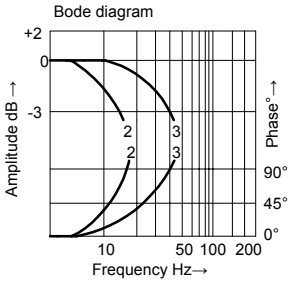

1= Ratedflow line
2= Command value: 10% ⟷ 90%
3= Command value: 50% ± 5%

Unit dimensions: Types 2WRCE

(nominal dimensions in mm)

Size 32/40

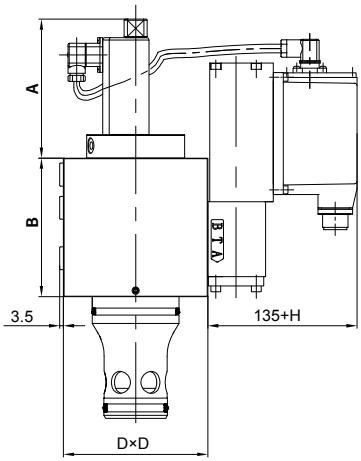

Size 50

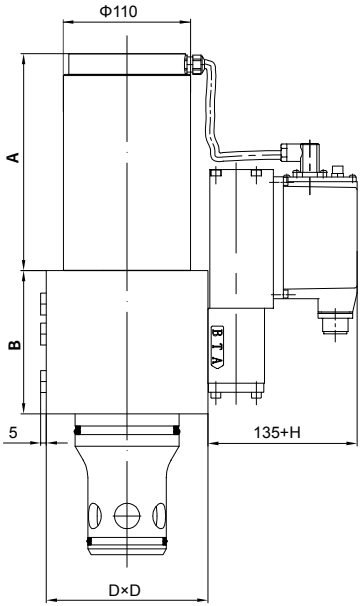

Size	A	B	C	H only for 2WRCE... WK15... 2WRCE... WL15...	Fastening bolts class 12.9	Tightening torque
32	135	105	100	50	4- M16×60	300 Nm
40	148	120	125	50	4- M20×70	600 Nm
50	188	124	140	50	4- M20×80	600 Nm

Installation dimensions according to DIN ISO 7368

(dimensions in mm)

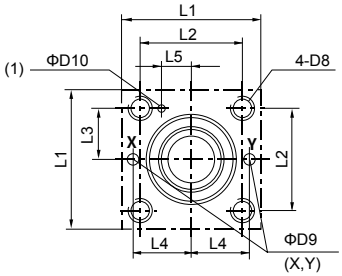

Installation bore type 2WRCE

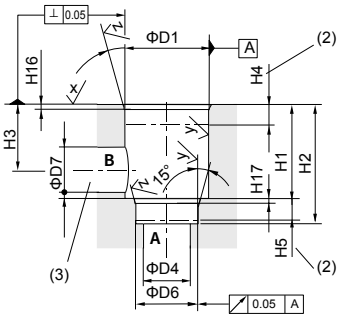

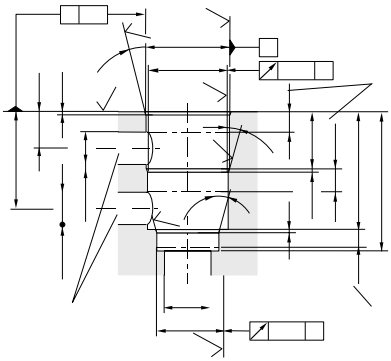

Size	32	40	50
L1	105	125	140
L2±0.2	70	85	100
L3±0.2	35	42.5	50
L4±0.2	41	50	58
L5	17	23	30
$ΦD1^{H7}$	60	75	90
$ΦD2^{H7}$	58	73	87
$ΦD3^{H7}$	55	55	68
ΦD4	32	40	50
ΦD5	24	30	35
$ΦD6^{H7}$	45	55	68
ΦD7	32	40	50
D8	M16	M20	M20
max.ΦD9	8	10	10
ΦD10	6	6	8
$H1^{+0.2}_{0}$	70	87	100
$H2^{+0.2}_{0}$	85	105	122
H3	52	64	72
H4	30	30	35
H5	13	15	17
H7	43.5	54	87
H8	85	105	143
H9	100	125	165
H10	30	36	66
H11	70.5	87	122
H12	18	21	48
H13	15	18	18
H16	2.5	3	4
H17	2.5	3	3
H18	35	45	45

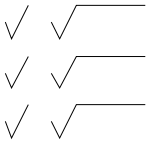

(1) Locating hole for locking pin
(2) Depth of fit minimum dimension
(3) The ports P, T and B can be positioned around the central axis of port A.
Sufficient distance from the mounting bores and control bores is to be observed.